PLAN HAS BEEN ACCEPTED BY
COSA
May 29, 1998 427-C
(date) (number)
If no plats are filed, plan will
expire on Nov 28, 1999
1st plat filed on

LOCATION MAP
N.T.S.

RECEIVED
98 JUN -2 PM 3:51
CITY OF SAN ANTONIO
LAND DEVELOPMENT
SERVICES DIVISION

SCALE : 1"=200'

P-1B, C.B. 4848
P-11A, C.B. 4865
P-2C, C.B. 4865
MARCEAU, STEPHEN & EVA
(OLIVER RANCH TRACT)
(OWNER)

P-2, C.B. 4865
P-2F, C.B. 4926
ROGERS, WALLACE & MARY
(OWNER)

P-6, C.B. 4926
MORETTI, J. MICHAEL
(OWNER)

P-7A, C.B. 4900
P-9A, C.B. 4926
SENDERO RANCH II DEVELOPMENT, LTD.
C/O KACHE INTERNATIONAL, INC
(OWNER)
522.6 AC. TRACT
VOL.7077,PGS.1895-1902

P-7A, C.B. 4900
P-9A, C.B. 4926
ENRIQUE FUENTES
C/O KACHE INTERNATIONAL, INC
(OWNER)
127 AC. COMMERCIAL

P-7A, C.B. 4900
P-9A, C.B. 4926
SENDERO RANCH II DEVELOPMENT, LTD.
C/O KACHE INTERNATIONAL, INC
(OWNER)
522.6 AC. TRACT
VOL. 7077,PGS.1895-1902

CANYON VALLEY, LTD.
847.1 AC. TRACT
VOL.6919,PGS.1262-1271

PHASE IV
PHASE III
PHASE II
PHASE I
PHASE II
363 ACRES

EXISTING GOLF COURSE

FUTURE EXTENSION OF WILDERNESS OAKS

U.S. 281 (200' R.O.W.)

GOLF CANYON ROAD
86' R.O.W. (FORMERLY EWING RD.)

LIMITS OF 100 YEAR FLOOD PLAIN FROM F.E.M.A. FIRM MAP NO. 48029C0140E DATED FEBRUARY 15, 1996

50' R.O.W.(TYP. TO INTERIOR STREETS) 30' PAVEMENT

60' R.O.W. 40' PAVEMENT

45' MAX. R.O.W. DEDICATION

RADIAL BEARING S07°54'37"E

RADIAL BEARING S05°55'54"W

APPROX. 800'

APPROX. 3150'

#2 OR #3

#6

#8 OR #9

ACREAGE

USAGE: SINGLE FAMILY RESIDENTIAL

PHASE I:	82 ACRES
PHASE II:	66 ACRES
PHASE III:	112 ACRES
PHASE IV:	44 ACRES
DRAINAGE:	59 ACRES
TOTAL:	363 ACRES

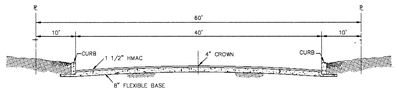

TYPICAL STREET SECTIONS (60' R.O.W.)
N.T.S.

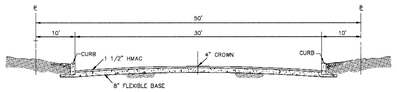

TYPICAL STREET SECTIONS (50' R.O.W.)
N.T.S.

SUMMERLIN

PRELIMINARY OVERALL AREA DEVELOPMENT PLAN

DEVELOPER: SUMMERLIN PROPERTIES, INC.
P.O. BOX 1629
WIMBERLEY, TEXAS 78676
TEL.(512) 847-5263

SANITARY SEWER: SAN ANTONIO WATER SYSTEM
WATER: SAN ANTONIO WATER SYSTEM
ELECTRIC: CITY PUBLIC SERVICE
TELEPHONE: GUADALUPE VALLEY TELEPHONE COMPANY

PAPE-DAWSON ENGINEERS
CIVIL & ENVIRONMENTAL
555 E. RAMSEY SAN ANTONIO, TEXAS 78216 (210)375-9000

FEBRUARY 1998 JOB NO. 4042-00

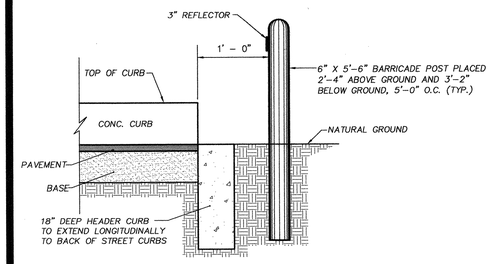

HEADER CURB & BARRICADE POST DETAIL

NOT-TO-SCALE

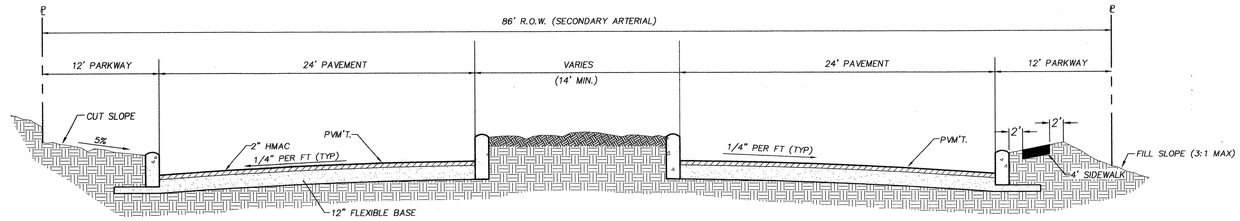

TYPICAL STREET SECTION – 86' R.O.W.

NOT-TO-SCALE

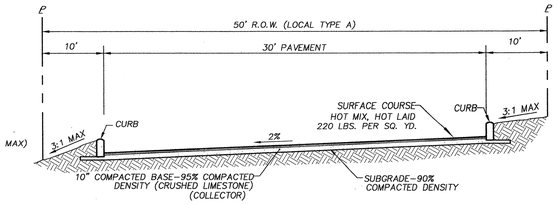

TYPICAL STREET SECTION – 50' R.O.W.

NOT-TO-SCALE

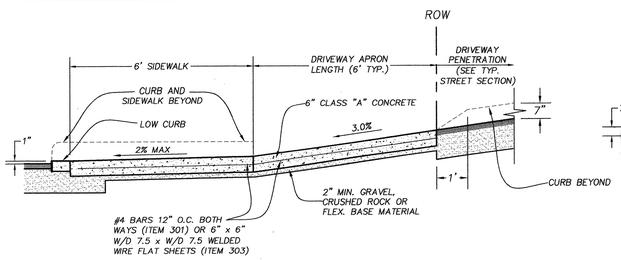

DRIVEWAY SECTION

(NOT TO SCALE)

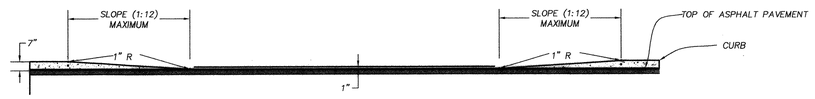

DRIVEWAY CURB PROFILE

(NOT TO SCALE)

CONCRETE DRIVEWAY GENERAL NOTES:

1. DUMMY JOINTS PARALLEL TO THE CURB SHALL BE PLACED WHERE THE SIDEWALK MEETS THE DRIVEWAY. DUMMY JOINTS PERPENDICULAR TO THE CURB , AND WITHIN THE BOUNDARIES OF THE PARALLEL DUMMY JOINTS, SHALL BE PLACE AT INTERVALS EQUAL TO THE WIDTH OF THE SIDEWALK.

2. A MIN. OF TWO ROUND AND SMOOTH DOWEL BARS 3/8" IN DIAMETER AND 18" IN LENGTH SHALL BE SPACED 18" APART AT EACH EXPANSION JOINT.

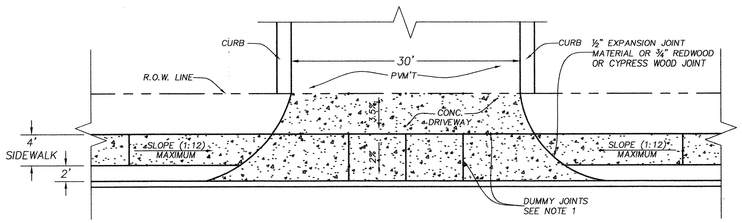

DRIVEWAY PLAN VIEW

(NOT TO SCALE)

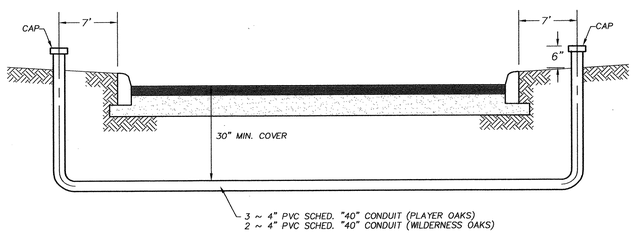

TYPICAL CONDUIT DETAIL

NOT-TO-SCALE

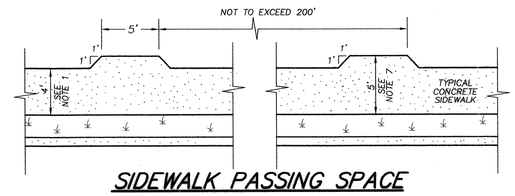

SIDEWALK PASSING SPACE

(NOT TO SCALE)

SIDEWALK NOTES

1. SIDEWALKS SHALL HAVE A MINIMUM UNOBSTRUCTED WIDTH OF 4' ON STREETS SHOWN.

2. SIDEWALK RAMP LENGTHS PRESENTED IN TABLE 1 ARE GUIDELINES ONLY. SIDEWALK RAMP LENGTHS SHALL BE OF SUFFICIENT LENGTH TO MAINTAIN 8.33% (12:1) MAXIMUM SLOPE.

3. ALL RAMPS SHALL CONTRAST VISUALLY WITH ADJOINING SURFACES, EITHER LIGHT-ON-DARK, OR DARK-ON-LIGHT. THE MATERIAL USED TO PROVIDE CONTRAST SHALL BE AN INTEGRAL PART OF THE WALKING SURFACE.

4. SIDEWALK RAMP TYPE V SHALL BE USED ONLY WHERE THERE IS SIGNIFICANT RESTRICTION WITHIN THE PARKWAY TO CONSTRUCT TYPE I OR TYPE III RAMPS.

5. CONSTRUCTION OF ALL WHEELCHAIR RAMPS TO BE INCLUDED UNDER ITEMS "500 – CONCRETE CURBING", "501 – MACHINE LAID CURB" AND/OR "502 – CONCRETE SIDEWALKS". RAMP SURFACE SHALL BE BRUSH FINISHED AND GROOVED.

6. THESE DETAILS ARE FOR REFERENCE ONLY. ACTUAL LOCATIONS OF WHEELCHAIR RAMPS TO BE SHOWN ON CONSTRUCTION PLANS. CITY CONSTRUCTION INSPECTOR CAN ADJUST LOCATIONS FOR SAFETY OR UTILITY CLEARANCE.

7. SIDEWALKS LESS THAN 5 FEET IN WIDTH SHALL BE PROVIDED WITH A PASSING SPACE AT A MAXIMUM SPACING OF 200 FEET.

8. WHEELCHAIR RAMP SHALL BE CONSTRUCTED WITH 4" CONCRETE AND 2" GRAVEL, CRUSHED ROCK OR FLEXIBLE BASE MATERIAL.

9. REINFORCING STEEL SHALL BE #3 BARS AT 18" O.C.E.W. OR 6" x 6" – W2.9 x W2.9.

10. WHEELCHAIR RAMP GROOVES SHALL BE 1 / 4" DEEP, 3 / 4" WIDE AND 2" APART.

11. WHEELCHAIR RAMP LANDINGS SHALL NOT BE GROOVED OR CONTRAST IN COLOR.

TABLE 1 (SEE NOTE 2)		
GUTTER SLOPE	SIDEWALK RAMP LGTH.(12:1)	
	LOW SIDE	HIGH SIDE
1%	5'-6"	7'-2"
2%	5'-0"	8'-4"
3%	4'-6"	10'-0"
4%	4'-2"	12'-6"
5%	3'-10"	16'-8"

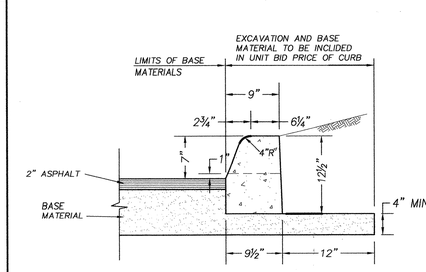

STANDARD CURB DETAIL

NOT-TO-SCALE

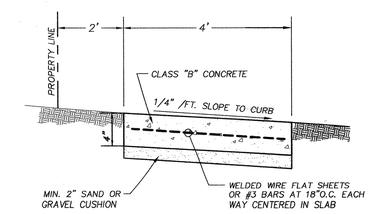

SIDEWALK DETAIL

NOT-TO-SCALE

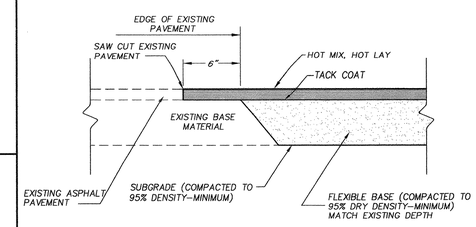

PAVEMENT JUNCTURE DETAIL

NOT-TO-SCALE

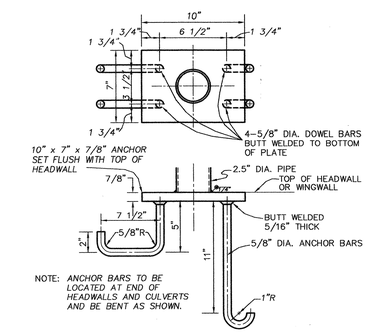

NOTE: ANCHOR BARS TO BE LOCATED AT END OF HEADWALLS AND CULVERTS AND BE BENT AS SHOWN.

PIPE ANCHORAGE DETAILS

NOT-TO-SCALE

NOTE:
ALL CONSTRUCTION OF HANDRAIL SHALL FOLLOW THE CITY OF SAN ANTONIO STANDARD SPECIFICATIONS FOR PUBLIC WORKS CONSTRUCTION.

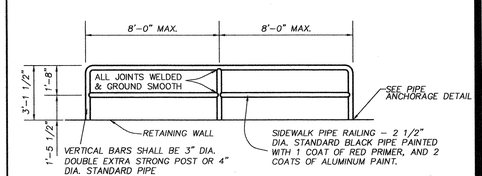

PIPE RAILING NOTE:

1. COORDINATE SIDEWALK PIPE RAILING COLOR WITH OWNER.

TYPICAL PIPE RAILING ELEVATION

NOT-TO-SCALE

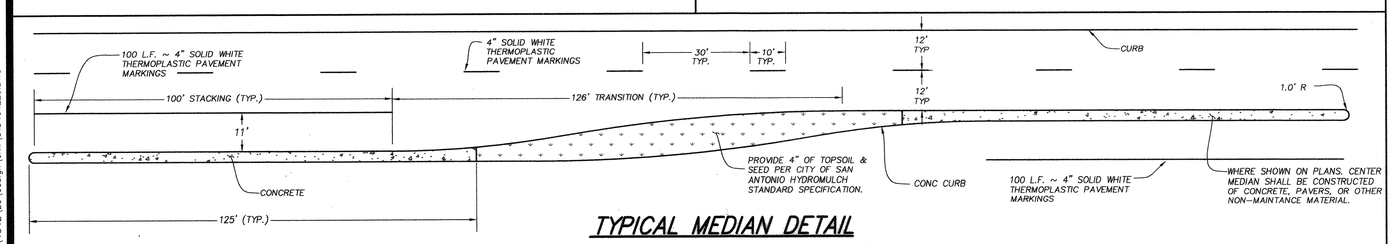

TYPICAL MEDIAN DETAIL

(NOT TO SCALE)

REVISIONS:

STATE OF TEXAS
BRICE B. MOCZYGEMBA
65747
LICENSED PROFESSIONAL ENGINEER
5/30/03

PAPE-DAWSON ENGINEERS
555 EAST RAMSEY | SAN ANTONIO TEXAS 78216 | PHONE: 210.375.9000 FAX: 210.375.9010

SUMMERGLEN, UNIT 5A-3
SAN ANTONIO, TEXAS
STREET DETAIL SHEET

PLAT NO. 030284

JOB NO. 4042-29
DATE APRIL 2003
DESIGNER DH
CHECKED MJJ DRAWN WJS
SHEET 10

Date: May 28, 2003, 3:32pm User ID: JRobinson
File: K:\14042\29\design\civil\STD404229.DWG

427C

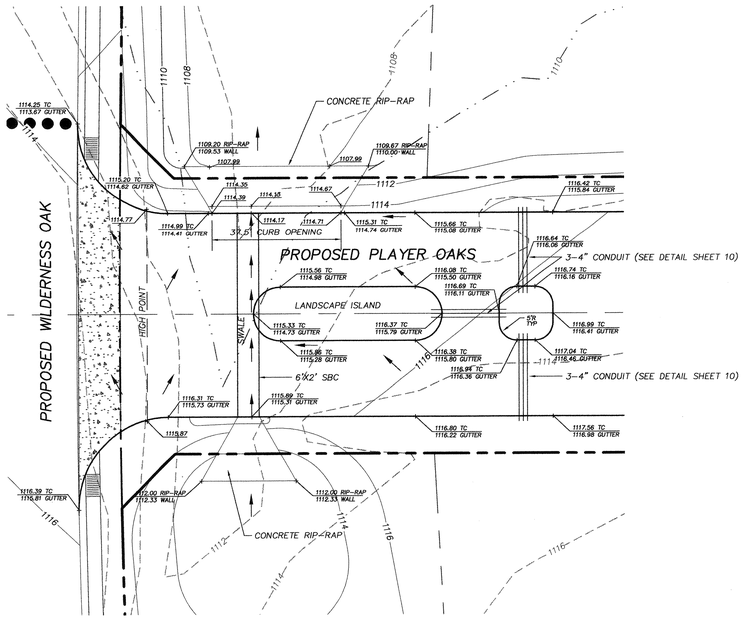

GRADING DETAIL

SCALE: 1"=20'

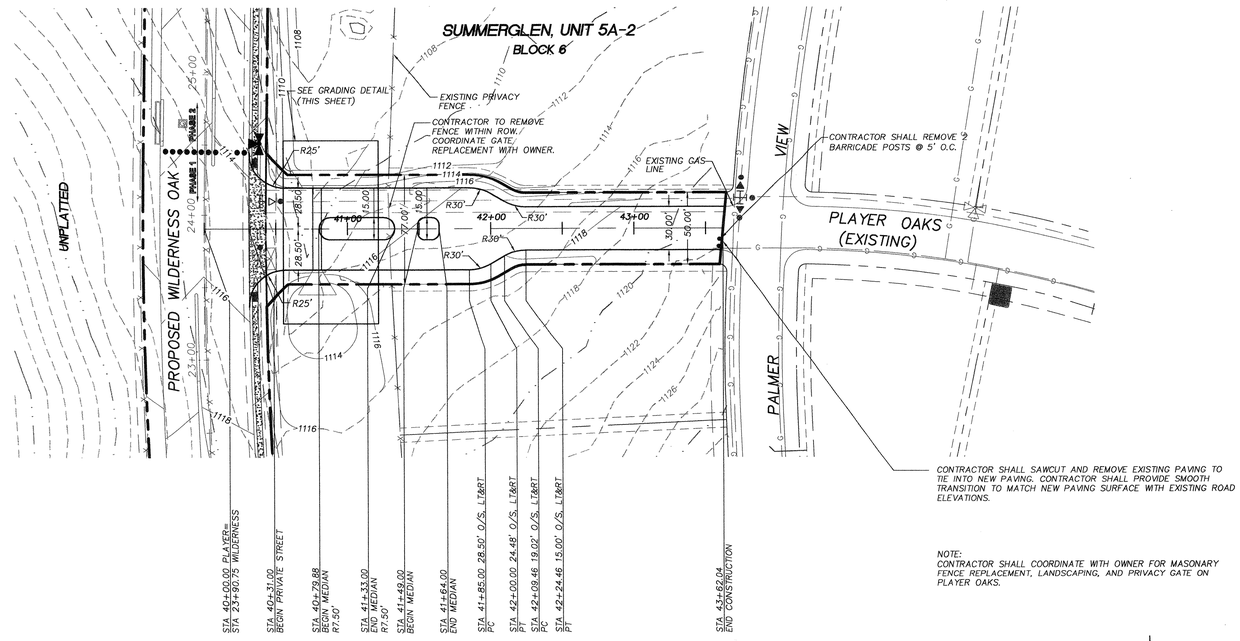

NOTE:
CONTRACTOR SHALL COORDINATE WITH OWNER FOR MASONARY FENCE REPLACEMENT, LANDSCAPING, AND PRIVACY GATE ON PLAYER OAKS.

SCALE : HORIZ 1"=50'
VERT 1"=5'

PLAYER OAKS
STA: 40+31.00 TO 43+62.04

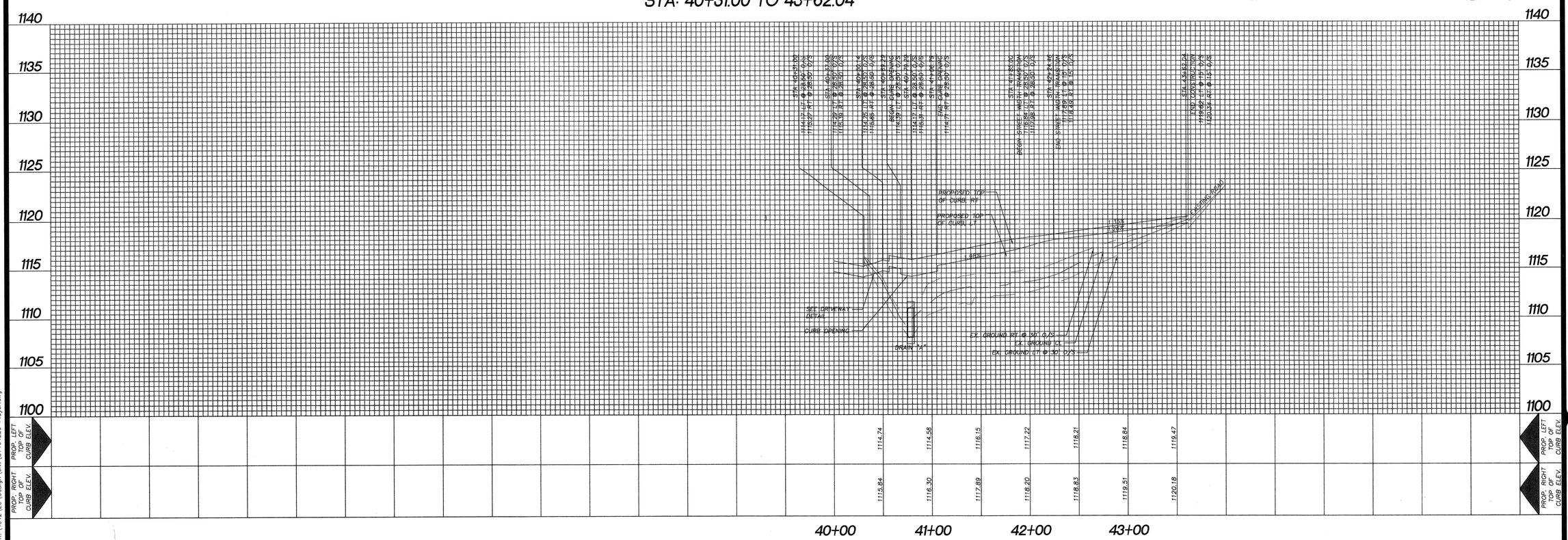

REVISIONS:

STATE OF TEXAS
BRICE B. MOCZYGEMBA
65747
LICENSED
PROFESSIONAL ENGINEER
Brice Moczygemba
5/30/03

PAPE-DAWSON ENGINEERS
555 EAST RAMSEY | SAN ANTONIO TEXAS 78216 | PHONE: 210.375.9000 FAX: 210.375.9010

SUMMERGLEN, UNIT 5A-3
PLAYER OAKS
STREET PLAN & PROFILE

PLAT NO. 030284

JOB NO. 4042-29
DATE MAY 2003
DESIGNER DPH
CHECKED MJJ DRAWN DPH
SHEET 9

Date: May 28, 2003, 3:31pm User ID: JRobinson
File: K:\4042\29\design\civil\S14042929-Player.dwg

THIS DOCUMENT HAS BEEN PRODUCED FROM MATERIAL THAT WAS STORED AND/OR TRANSMITTED ELECTRONICALLY AND MAY HAVE BEEN INADVERTENTLY ALTERED. RELY ONLY ON FINAL HARDCOPY MATERIALS BEARING THE CONSULTANT'S ORIGINAL SIGNATURE AND SEAL.

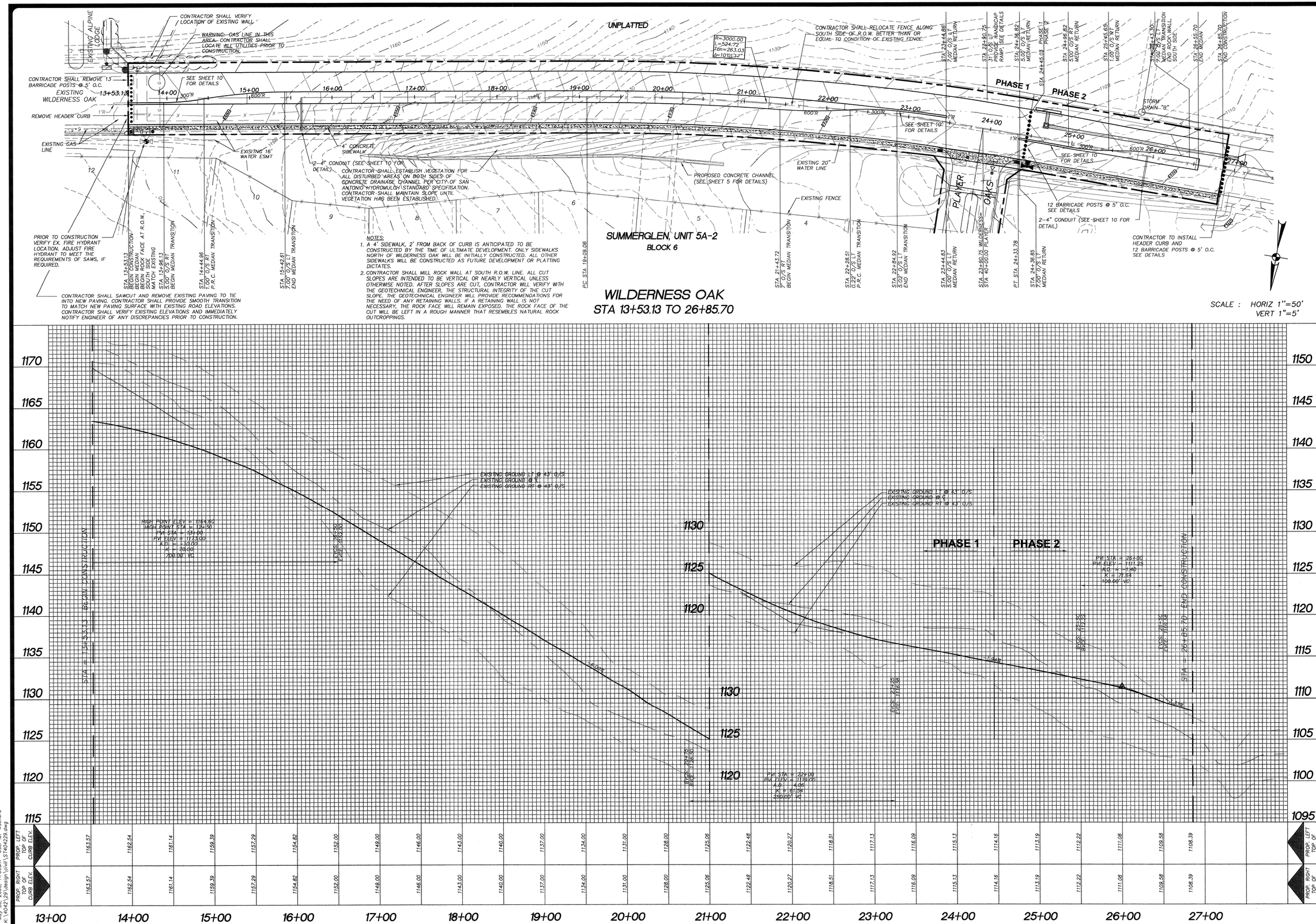

REVISIONS:

STATE OF TEXAS
BRICE B. MCCARTHEA
65747
LICENSED PROFESSIONAL ENGINEER
5/30/03

PAPE-DAWSON ENGINEERS
555 EAST RANSEY | SAN ANTONIO TEXAS 78216 | PHONE: 210.375.9000 FAX: 210.375.9010

SUMMERGLEN, UNIT 5A-3
WILDERNESS OAK
STREET PLAN & PROFILE

PLAT NO. 030284

JOB NO. 4042-29
DATE MAY 2003
DESIGNER DPH
CHECKED BT DRAWN WJS
SHEET 8

Date: May 30, 2003, 11:09am User ID: wsalford
File: K:\4042\29\design\civil\ST404229.dwg

THIS DOCUMENT HAS BEEN PRODUCED FROM MATERIAL THAT WAS STORED AND/OR TRANSMITTED ELECTRONICALLY AND MAY HAVE BEEN INADVERTENTLY ALTERED. RELY ONLY ON FINAL HARDCOPY MATERIALS BEARING THE CONSULTANT'S ORIGINAL SIGNATURE AND SEAL.

TABLE OF DIMENSIONS & REINFORCING STEEL
(Wings for One Structure End)

Dimensions					Variable Reinforcing				(3) Estimated Quantities per ft of wing length (2~Wings)	
					Bars J1		Bars J2			
Maximum Wingwall Height Hw	W	X	Y	Z	Size	Spa	Size	Spa	Reinf (Lb/Ft)	Conc (CY/Ft)
2'-6"	2'-5"	1'-0"	9"	7"	#4	1'-0"	#4	1'-0"	33.73	0.248
3'-0"	2'-5"	1'-0"	9"	7"	#4	1'-0"	#4	1'-0"	37.07	0.261
3'-6"	2'-5"	1'-0"	9"	7"	#4	1'-0"	#4	1'-0"	37.74	0.273
4'-0"	2'-5"	1'-0"	9"	7"	#4	1'-0"	#4	1'-0"	38.41	0.285
4'-6"	3'-2"	1'-6"	1'-0"	7"	#4	1'-0"	#4	1'-0"	41.75	0.330
5'-0"	3'-2"	1'-6"	1'-0"	7"	#4	1'-0"	#4	1'-0"	45.09	0.343
5'-6"	3'-2"	1'-6"	1'-0"	7"	#4	1'-0"	#4	1'-0"	45.75	0.355
6'-0"	3'-2"	1'-6"	1'-0"	7"	#4	1'-0"	#4	1'-0"	46.42	0.367
7'-0"	3'-8"	1'-9"	1'-3"	7"	#4	1'-0"	#4	1'-0"	52.77	0.414
8'-0"	4'-2"	2'-0"	1'-6"	8"	#5	1'-0"	#4	1'-0"	60.19	0.486
9'-0"	4'-8"	2'-3"	1'-9"	8"	#4	6"	#4	6"	81.49	0.535
10'-0"	5'-2"	2'-6"	2'-0"	8"	#5	6"	#4	6"	97.25	0.584
11'-0"	5'-8"	2'-9"	2'-3"	8"	#6	6"	#5	6"	133.65	0.634
12'-0"	6'-2"	3'-0"	2'-6"	9"	#7	6"	#5	6"	162.29	0.721
13'-0"	6'-8"	3'-3"	2'-9"	11"	#7	6"	#5	6"	178.80	0.856
14'-0"	7'-2"	3'-6"	3'-0"	1'-0"	#8	6"	#5	6"	216.78	0.959
15'-0"	7'-8"	4'-0"	3'-0"	1'-1"	#9	6"	#6	6"	283.06	1.068
16'-0"	8'-2"	4'-6"	3'-0"	1'-3"	#9	6"	#6	6"	297.02	1.234

TABLE OF WINGWALL REINFORCING
(2~Wings)

Bar	Size	No.	Spa
D	#5	~	1'-0"
E	#4	~	1'-0"
F	#4	~	1'-0"
G	#6	4	~
M	#4	4	~
P	#4	~	1'-0"
R	#5	6	~
V	#4	~	1'-0"

TABLE OF ESTIMATED CULVERT TOEWALL QUANTITIES

Bar	Size	No.	Spa
L	#4	~	1'-6"
Q	#4	1	~
Reinf (Lb/Ft)			2.45
Conc (CY/Ft)			0.037

1. Extend Bars P 3'-0" minimum into bottom slab of Box Culvert.
2. Adjust to fit as necessary to maintain 1 1/4" clear cover and 4" minimum between bars.
3. Quantities shown are based on an average wing height for two wings (one structure end). To determine total quantities for two wings multiply the tabulated values by Lw.
4. Recommended values of Slope are: 2:1, 3:1, 4:1, & 6:1.
5. When shown elsewhere on the plans, a 5" deep concrete riprap shall be constructed. Unless otherwise shown on the plans or directed by the Engineer, the riprap shall have a 6" wide by 1'-6" deep reinforced concrete toewall along all edges adjacent to natural ground; the toewall shall be reinforced by extending typical riprap reinforcing into the toewall; construction joints or grooved joints, oriented in the direction of flow, shall extend across the full distance of the riprap, at intervals of approximately 20'. When such riprap is provided, the culvert toewall shown in SECTION B-B will not be required. Payment for riprap shall be as required by the pertinent Item.
6. At Contractor's option, Culvert Toewall may be ended flush with Wingwall Toewall. Adjust reinforcing from that shown as necessary.
7. 0" min to 5'-0" max. For T6 or C6 Rail, see T6-CM standard for additional details. For curbs without rail and greater than 1'-0" high, see ECD standard for additional details. Estimated curb heights are shown elsewhere in the plans.
8. For vehicle safety, curb heights and wall heights shall be reduced, if necessary, to provide a maximum 3" projection above finished grade. No changes will be made in quantities and no additional compensation will be allowed for this work.

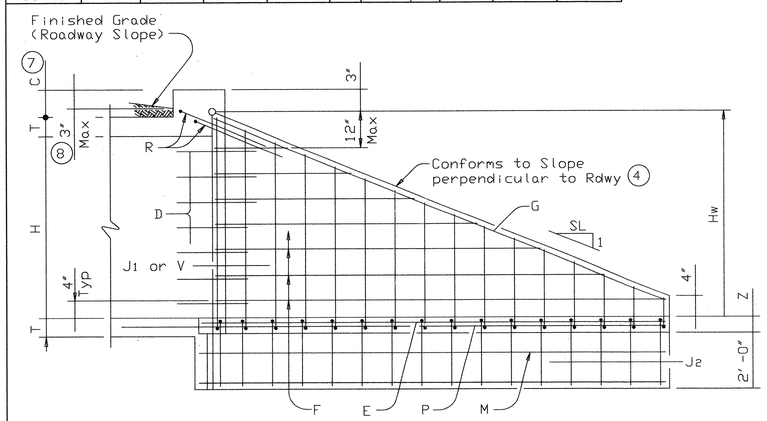

INSIDE ELEVATION

(Showing reinforcing. Culvert and Culvert Toewall reinforcing not shown for clarity.)

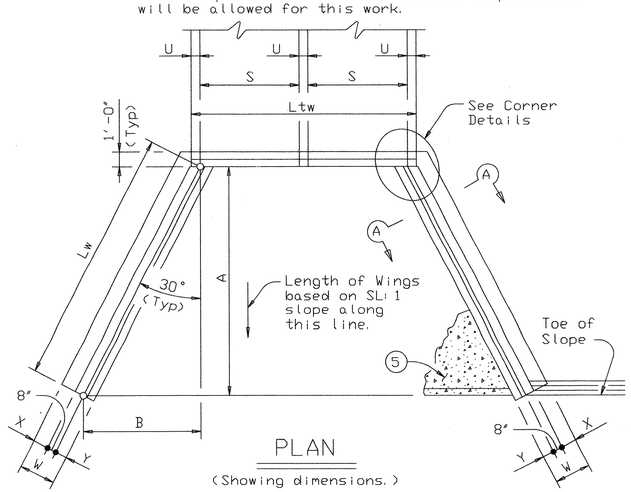

PLAN

(Showing dimensions.)

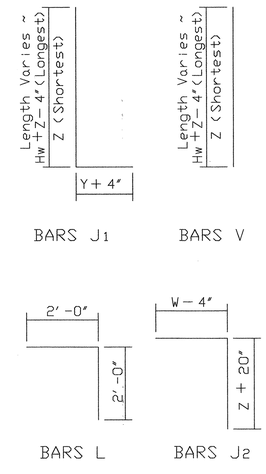

WING DIMENSION CALCULATIONS:

Formulas: (All values are in Feet)

Hw = H + T + C − 0.250'
A = (Hw − 0.333') (SL)
B = (A) Tangent (30°)
Lw = (A) ÷ Cosine (30°)

For Cast-in-place culverts:

Ltw = (N) (S) + (N+1) (U)

For Precast culverts:

Ltw = (N) (2U+S) + (N−1) (0.500')
Total Wingwall Area (Two Wings ~ S.F.)=(Hw + 0.333') (Lw)

Hw = Height of Wingwall
SL:1 = Side Slope Ratio (Horizontal:1 Vertical)
Lw = Length of Wingwall
Ltw = Culvert Toewall Length
N = Number of Culvert Spans

See applicable box culvert standard for H, S, T, and U values.

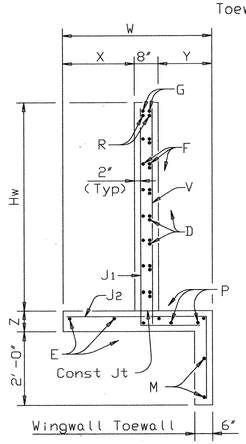

SECTION A-A

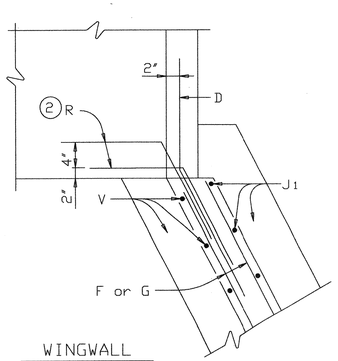

WINGWALL

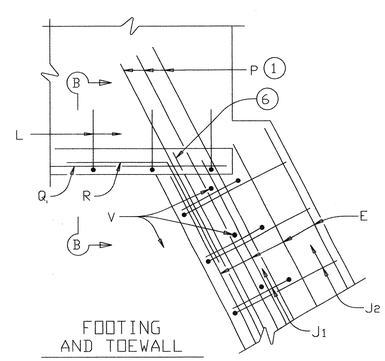

FOOTING AND TOEWALL

CORNER DETAILS

(Culvert and Culvert Toewall reinforcing not shown for clarity.)

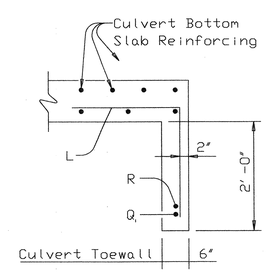

SECTION B-B (5)

GENERAL NOTES:

Designed according to current AASHTO Standard and Interim Specifications.

All reinforcing steel shall be Grade 60.

All concrete shall be Class "C" and shall have a minimum 28 day compressive strength of 3600 psi.

All reinforcing bars shall be adjusted to provide a minimum of 1 1/4" clear cover.

When structure is founded on solid rock, depth of toewalls for culverts and wingwalls may be reduced or eliminated as directed by the Engineer.

See BCS sheet for additional dimensions and information.

The quantities for concrete and reinforcing steel resulting from the formulas given on this sheet are for Contractor's information only.

DISCLAIMER:
The use of this standard is governed by the "Texas Engineering Practice Act". No warranty of any kind is made by TxDOT for any purpose whatsoever. TxDOT assumes no responsibility for the conversion of this standard to other formats or for incorrect results or damages resulting from its use.

Texas Department of Transportation
Bridge Division

FLARED WINGS
FOR 0° SKEW BOX CULVERTS

FW-0

FILE: fw-0stde.dgn	DN: GAF	CK: CAT	DW: TxDOT	CK: GAF
©TxDOT September 2000	DISTRICT	FEDERAL AID PROJECT		SHEET
REVISIONS				
	COUNTY	CONTROL	SECT	JOB	HIGHWAY

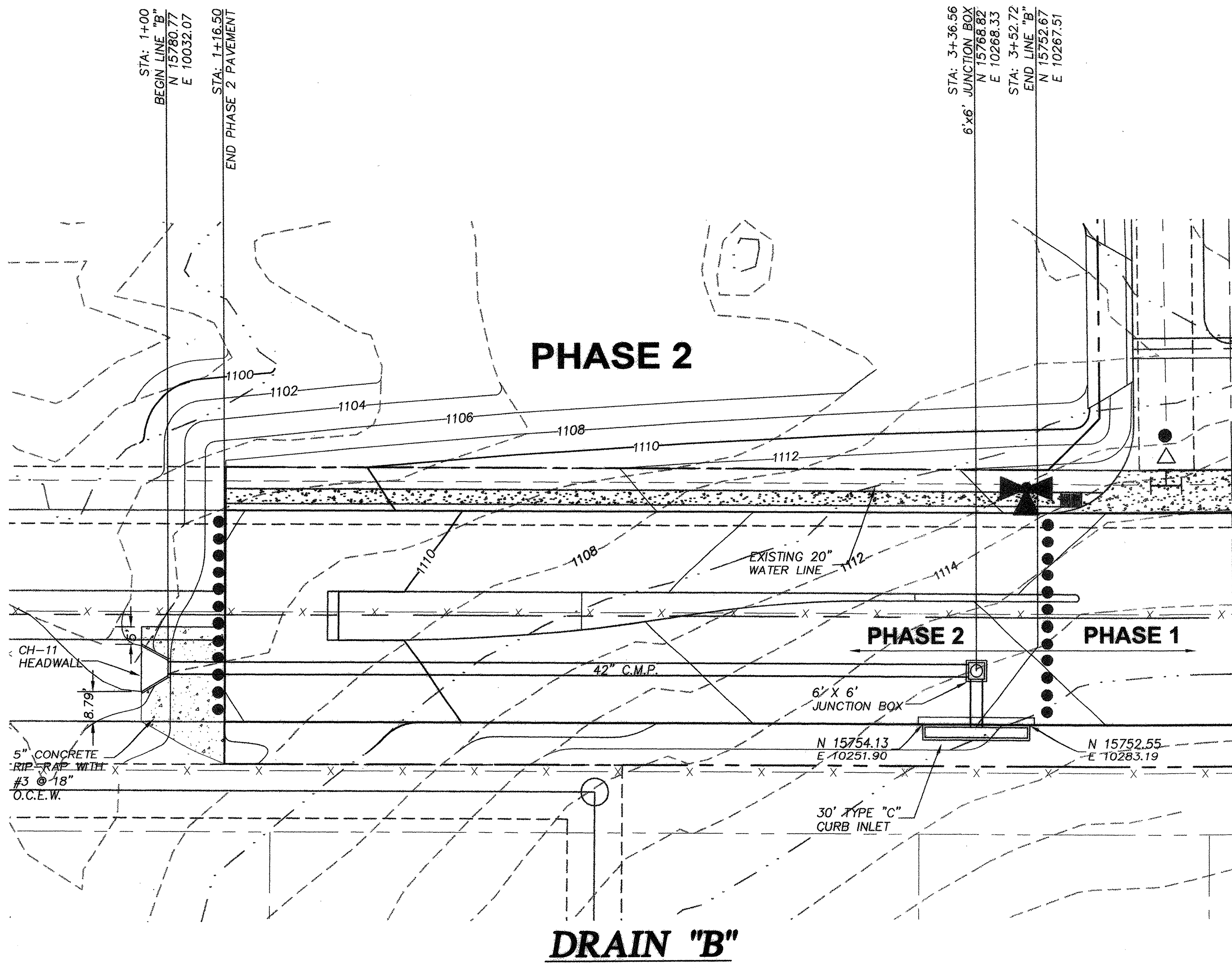

SCALE : VERTICAL 1"=30'
HORIZONTAL 1"=5'

DRAIN "B"

SCALE : 1"=30'

NOTES:
1) STORM DRAINAGE SYSTEM REQUIRES CITY OF SAN ANTONIO CONSTRUCTION INSPECTION AND FINAL CONSTRUCTION ACCEPTANCE.

2) NORTHING AND EASTING COORDINATES SHOWN ON PLAN FOR CURB INLETS ARE TO THE OUTSIDE FACE CORNERS OF INLET. COORDINATE POINTS SHOULD MATCH THE FACE OF CURB FOR WILDERNESS OAK.

3) NORTHING AND EASTING COORDINATES SHOWN ON PLAN FOR JUNCTION BOXES ARE TO THE CENTER OF THE JUNCTION BOX. COORDINATES FOR CURB INLET ARE FOR OUTSIDE CORNERS OF CURB INLET AND SHOULD MATCH FACE OF CURB.

4) CONTRACTOR SHALL VERIFY THAT COORDINATES DO REFLECT THE INTENDED LOCATION AS SHOWN ON THE PLANS AND NOTIFY ENGINEER OF ANY DISCREPANCIES.

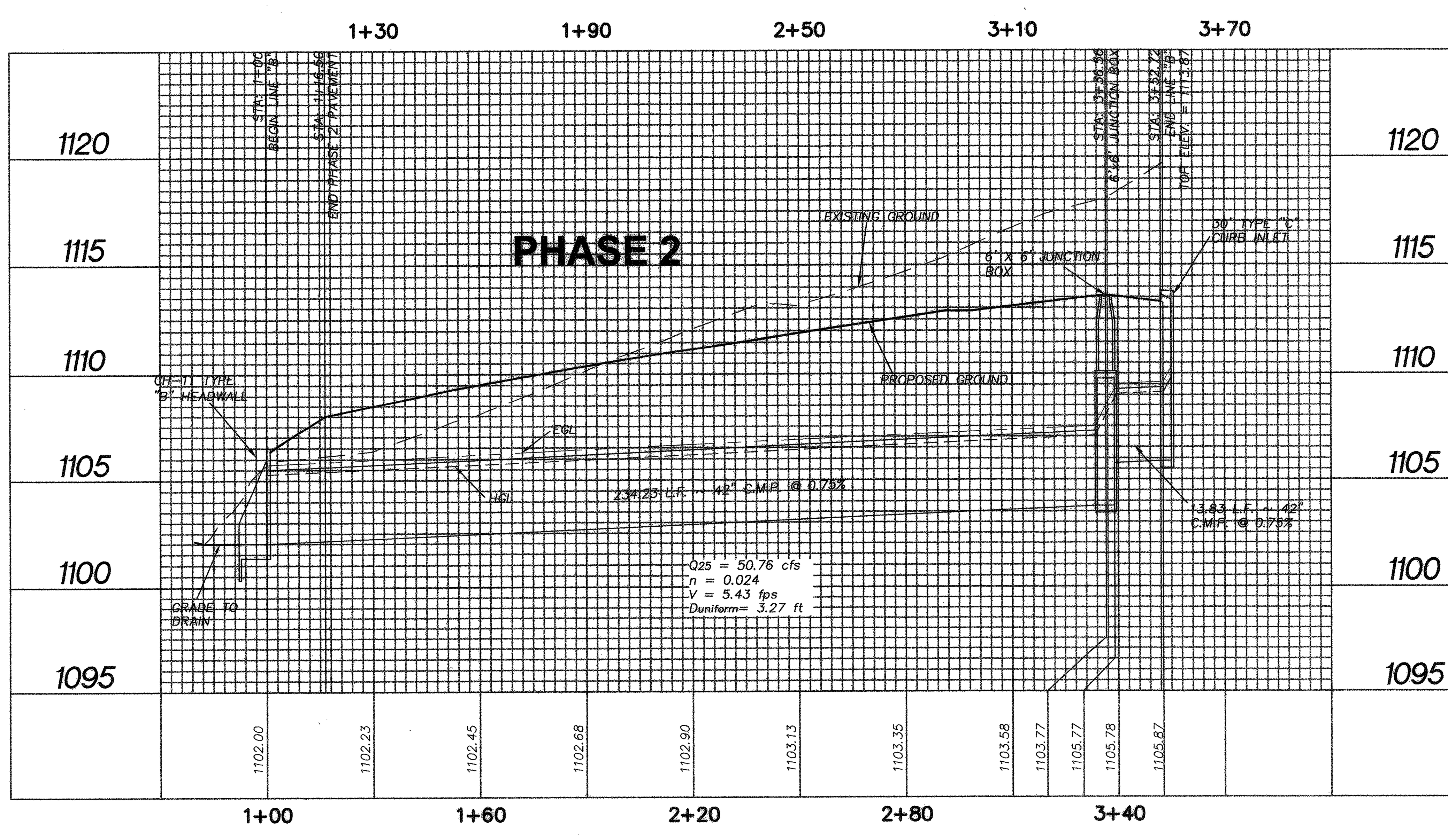

TRENCH EXCAVATION SAFETY PROTECTION

CONTRACTOR AND/ OR CONTRACTOR'S INDEPENDENTLY RETAINED EMPLOYEE OR STRUCTURAL DESIGN/GEOTECHNICAL/SAFETY/EQUIPMENT CONSULTANT, IF ANY, SHALL REVIEW THESE PLANS AND ANY AVAILABLE GEOTECHNICAL INFORMATION AND THE ANTICIPATED INSTALLATION SITES WITHIN THE PROJECT WORK AREA IN ORDER TO IMPLEMENT CONTRACTOR'S TRENCH EXCAVATION SAFETY PROTECTION SYSTEMS, PROGRAMS AND/OR PROCEDURES FOR THE PROJECT DESCRIBED IN THE CONTRACT DOCUMENTS. THE CONTRACTOR'S IMPLEMENTATION OF THESE SYSTEMS, PROGRAMS AND/OR PROCEDURES SHALL PROVIDE FOR ADEQUATE TRENCH EXCAVATION SAFETY PROTECTION THAT COMPLY WITH AS A MINIMUM, OSHA STANDARDS FOR TRENCH EXCAVATIONS. SPECIFICALLY, CONTRACTOR AND/OR CONTRACTOR'S INDEPENDENTLY RETAINED EMPLOYEE OR SAFETY CONSULTANT SHALL IMPLEMENT A TRENCH SAFETY PROGRAM IN ACCORDANCE WITH OSHA STANDARDS GOVERNING THE PRESENCE AND ACTIVITIES OF INDIVIDUALS WORKING IN AND AROUND TRENCH EXCAVATION.

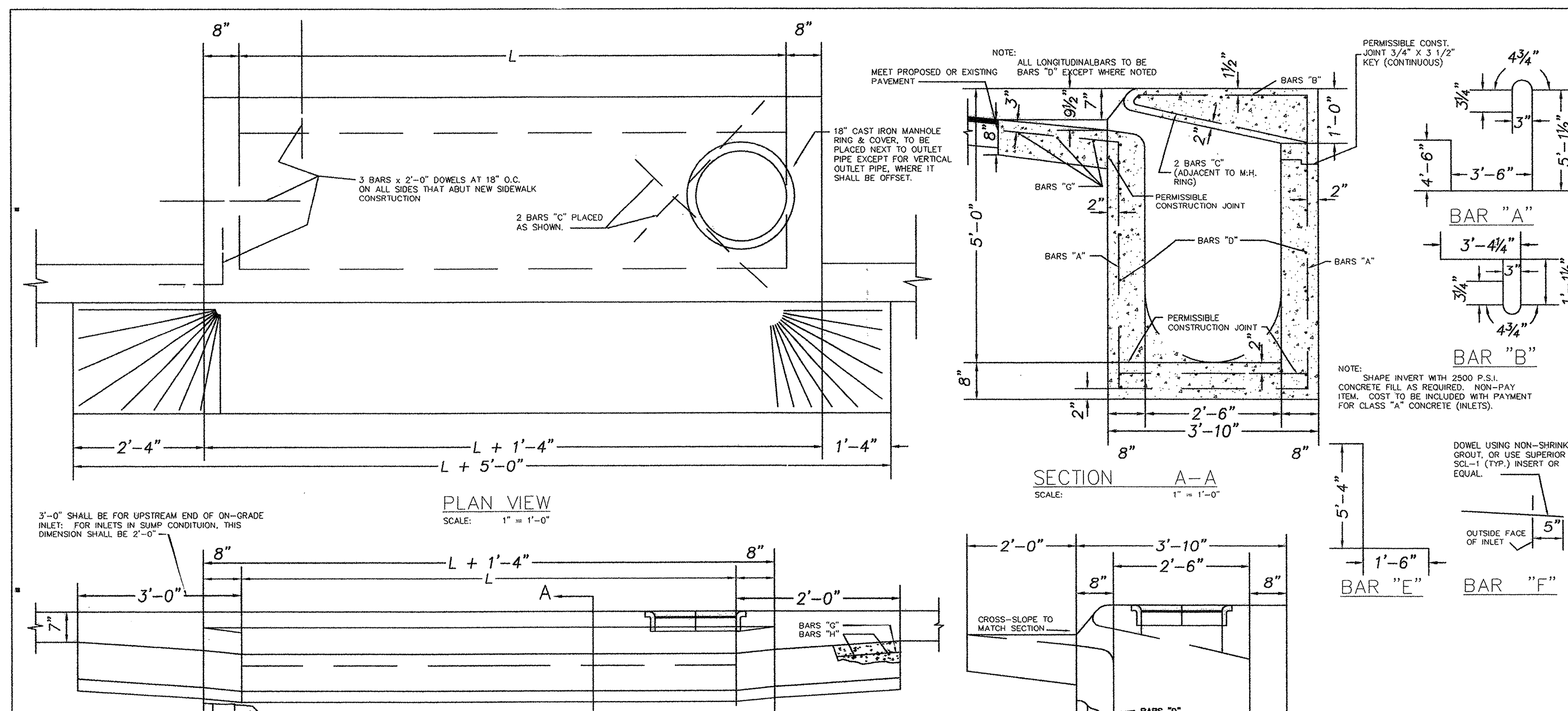

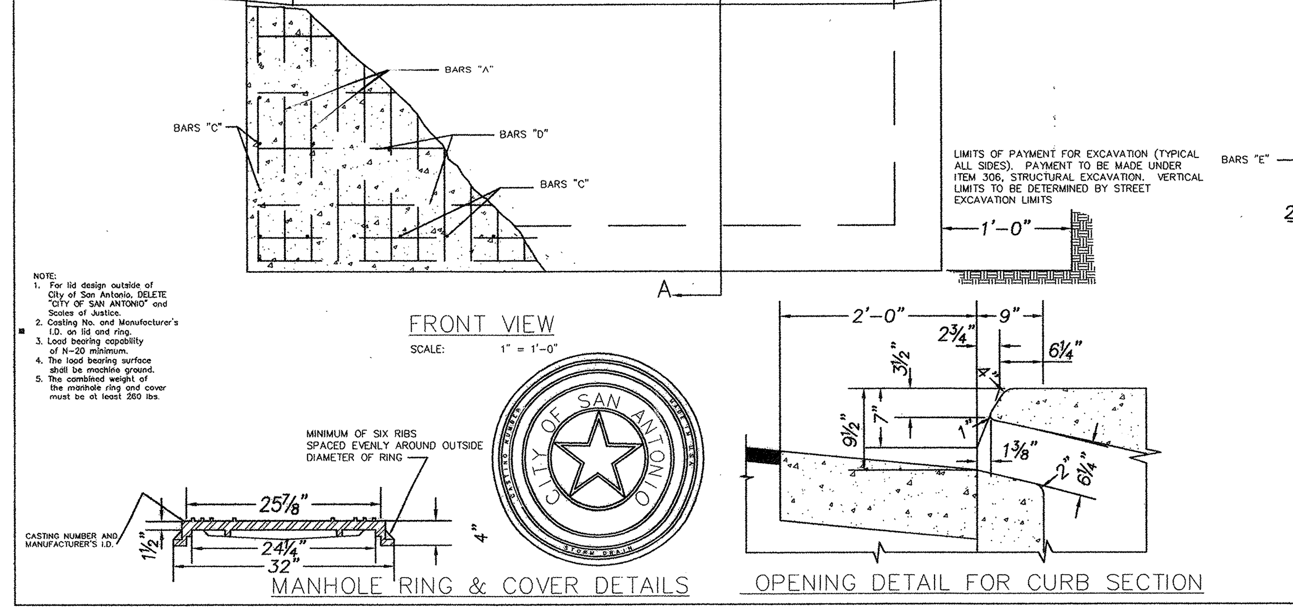

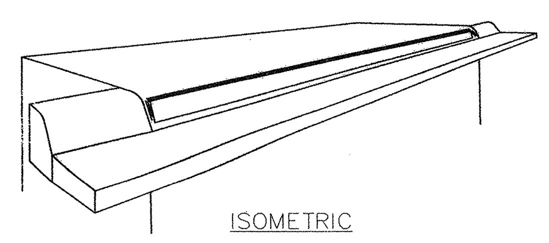

Reinforcing Steel Schedule

	BAR	NO.	SIZE	SPA.	LENGTH	WEIGHT
L=5'-0'	A	15	4	5"OC	13"-9 1/2"	138
	B	15	4	5"	5'-1"	52
	C	23	4	9"	3'-6"	54
	D	22	4	10"	6'-1"	89
	E	10	4	10 1/2"	6'-10"	46
	F	6	5	12"	2'-3"	14
	G	3	4	12"	9'-8"	20
	H	5	5	12"	1'-8"	9
*CONCRETE TOTAL=353 CY. MANHOLE CASTING=100 LBS. STEEL TOTAL=422 LBS						
L=10'-0'	A	27	4	5"OC	13"-9 1/2"	249
	B	27	4	5"	5'-1"	93
	C	30	4	9"	3'-6"	70
	D	22	4	10"	11'-1"	163
	E	10	4	10 1/2"	6'-10"	46
	F	12	5	12"	2'-3"	27
	G	3	4	12"	14'-8"	30
	H	5	5	12"	1'-8"	9
*CONCRETE TOTAL=5.75CY MANHOLE CASTING=100LBS. STEEL TOTAL=687LBS						
L=15'-0'	A	39	4	5"OC	13"-9 1/2"	359
	B	39	4	5"	5'-1"	134
	C	36	4	9"	3'-6"	84
	D	22	4	10"	16'-1"	236
	E	10	4	10 1/2"	6'-10"	46
	F	17	5	12"	2'-3"	38
	G	3	4	12"	19'-8"	40
	H	5	5	12"	1'-8"	9
*CONCRETE TOTAL=7.97CY. MANHOLE CASTING=100LBS STEEL TOTAL=946LBS						
L=20'-0'	A	51	4	5"OC	13"-9 1/2"	470
	B	51	4	5"	5'-1"	175
	C	43	4	9"	3'-6"	101
	D	22	4	10"	6'-1"	310
	E	10	4	10 1/2"	6'-10"	46
	F	22	5	12"	2'-3"	50
	G	3	4	12"	9'-8"	50
	H	5	5	12"	1'-8"	9
*CONCRETE TOTAL=10.19CY MANHOLE CASTING=100LBS STEEL TOTAL=1211LBS						
L=25'-0'	A	63	4	5"OC	13"-9 1/2"	580
	B	63	4	5"	5'-1"	217
	C	50	4	9"	3'-6"	117
	D	22	4	10"	6'-1"	383
	E	10	4	10 1/2"	6'-10"	46
	F	27	5	12"	2'-3"	61
	G	3	4	12"	9'-8"	60
	H	5	5	12"	1'-8"	9
*CONCRETE TOTAL=12.41CY. MANHOLE CASTING=100LBS STEEL TOTAL=1473LB						
L=30'-0'	A	75	4	5"OC	13"-9 1/2"	691
	B	75	4	5"	5'-1"	258
	C	56	4	9"	3'-6"	131
	D	22	4	10"	6'-1"	457
	E	10	4	10 1/2"	6'-10"	46
	F	32	5	12"	2'-3"	72
	G	3	4	12"	9'-8"	70
	H	5	5	12"	1'-8"	9
*CONCRETE TOTAL=14.63CY MANHOLE CASTING=100LBS STEEL TOTAL=1734LB						

*These figures do not exclude concrete and steel intercepted by Manhole and Reinforced Concrete Pipe.
*Includes concrete gutter for on-grade inlet. Reduce by .05 cy for inlets in sump.

GENERAL NOTES:

1. ALL BARS INTERCEPTING MANHOLE RING & REINFORCING CONCRETE PIPE SHALL BE FIELD CUT.
2. CONCRETE FOR STRUCTURES SHALL BE CLASS "A", 3000 P.S.I. IN 28 DAYS.
3. ALL DIMENSIONS RELATING TO REINFORCING STEEL ARE TO CENTER OF BARS.
4. ALL EXPOSED CORNERS SHALL BE CHAMFERED TO 3/4"
5. CONSTRUCTION JOINT SHOWN AT FLOWLINE MAY BE RAISED A MAXIMUM OF 6" AT THE CONTRACTOR'S DISCRESION. ADJUST LENGTH OF VERTICAL STEEL AS REQUIRED.
6. ALL REINFORCING STEEL SHALL CONFORM TO THE REQUIREMENTS OF A.S.T.M. A-615, GRADE 60.

CITY OF SAN ANTONIO STANDARD		
DROP INLET DETAILS TYPE "C"		
DN. R.B.H. DR. V.P.C. CK. R.B.H. TR. M.G.2 CK. R.B.H.	CITY OF SAN ANTONIO DEPARTMENT OF PUBLIC WORKS ENGINEERING DIVISION	DATE / SHEET

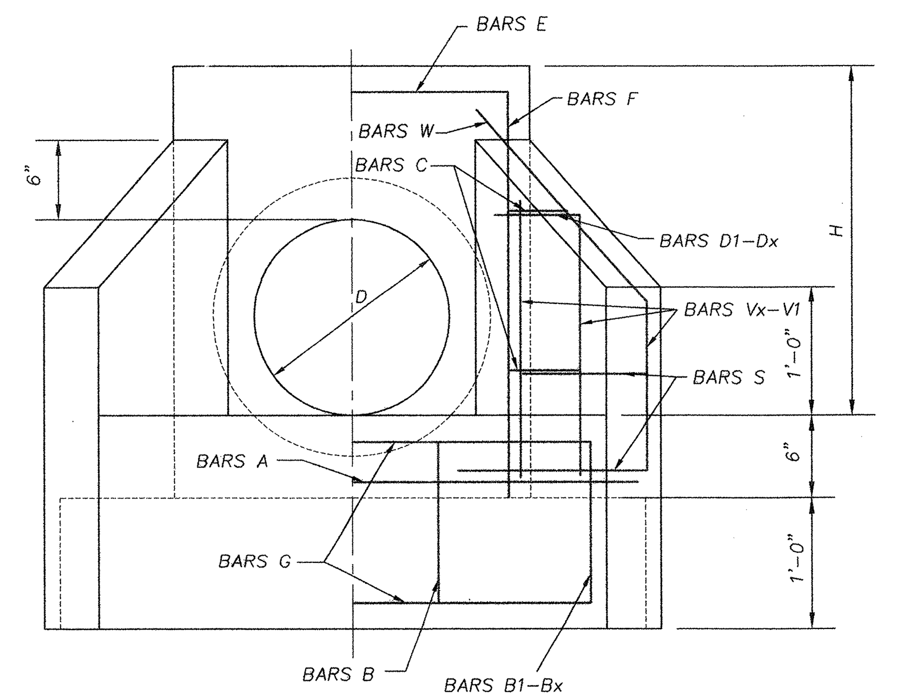

ELEVATION TYPE B

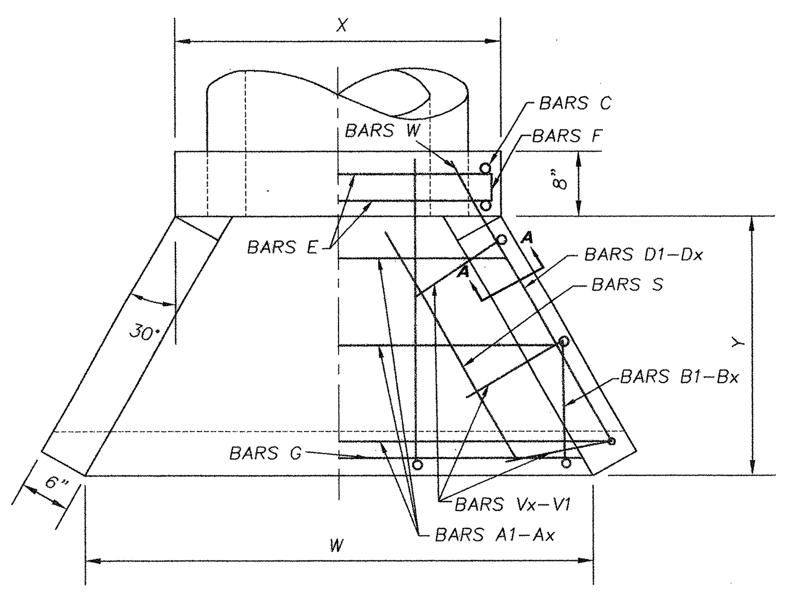

PLAN TYPE B

BARS B	Y + 4"
BARS Bx	9" MIN.

BARS B & B1-Bx

GENERAL NOTES:
DESIGNED ACCORDING TO CURRENT AASHTO STANDARD INTERIM SPECIFICATIONS.

REINFORCING STEEL SHALL BE PLACED WITH THE CENTER OF THE OUTSIDE LAYER OF BARS 2" FROM THE SURFACE OF THE CONCRETE.

ALL REINFORCING STEEL SHALL BE GRADE 60.

ALL CONCRETE SHALL BE CLASS "C" AND SHALL HAVE A MINIMUM 28 DAY COMPRESSIVE STRENGTH OF 3600 PSI.

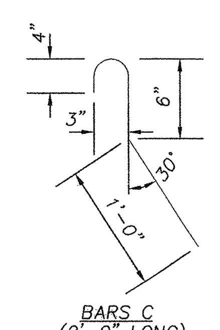

BARS C
(2'-0" LONG)

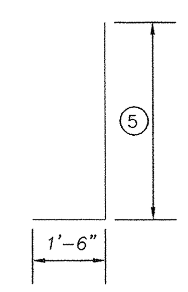

BARS V

(5) MIN. LENGTH = 6" + 3" x $\left(\frac{12 \times H - 7}{12 \times L}\right)$

MAX. LENGTH = 12 x H − 3" x $\left(\frac{12 \times H - 7}{12 \times L}\right)$ − 1"

A1 = W + 4½"
A2 = W − 9⅜"

THIS DIMENSION REDUCED 1'-1⅞" FOR EACH SUCCESSIVE BAR.

BARS A1-Ax

TABLE OF VARIABLE DIMENSIONS AND QUANTITIES FOR ONE HEADWALL							
SLOPE	DIA. OF PIPE, D	W	X	Y	L	REF. (Lbs.)	CONC. (CY)
2:1	42"	13'-5¼"	5'-6½"	7'-10"	9'-0½"	290	2.8

TABLE OF CONSTANT DIMENSIONS			
DIA. OF PIPE, D	G	K	H
42"	2'-4"	1'-0"	4'-6"

(4) TABLE OF REINFORCING STEEL			
BAR	SIZE	SPA.	NO.
A	#4	1'-0"	~
B	#3	1'-6"	~
C	#4	1'-0"	~
D	#3	1'-0"	~
E	#5	~	4
F	#5	~	~
G	#3	~	2
S	#4	~	6
V	#4	1'-0"	~
W	#5	~	4

(4) QUANTITIES SHOWN ARE FOR ONE STRUCTURE END. (ONE HEADWALL)

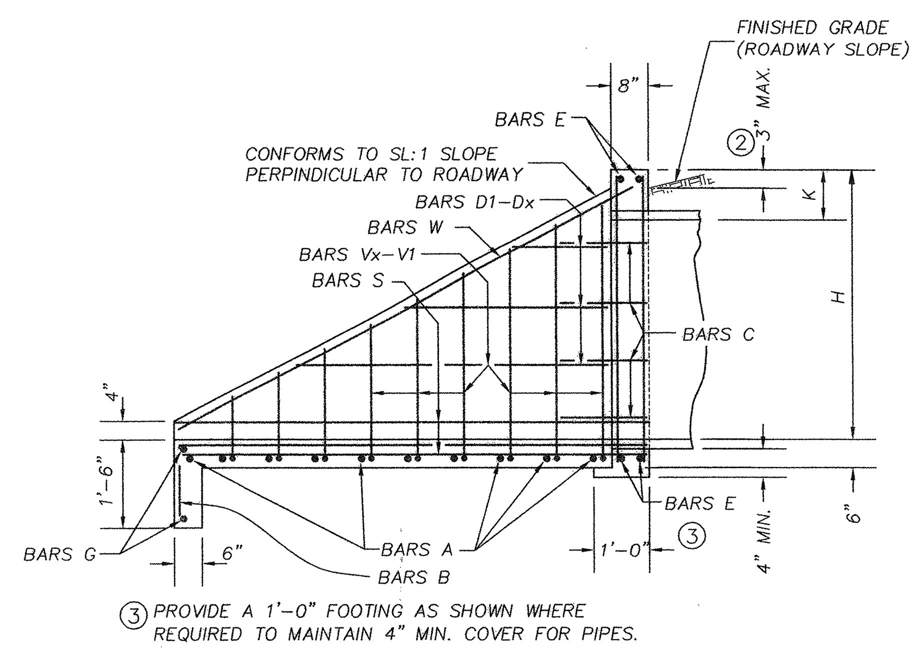

(3) PROVIDE A 1'-0" FOOTING AS SHOWN WHERE REQUIRED TO MAINTAIN 4" MIN. COVER FOR PIPES.

TYPICAL WING ELEVATION

REQUIRED TO MAINTAIN 4" MIN. COVER FOR PIPES. CONCRETE FOR FOOTING SHALL BE ADDED TO TOTAL QUANTITIS SHOWN.

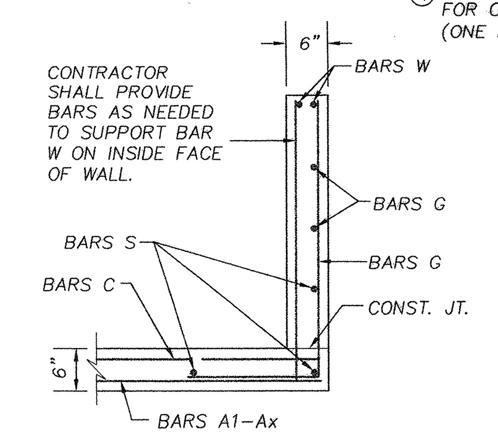

SECTION A-A

REVISIONS:

STATE OF TEXAS
BRICE B. MOCZYGEMBA
65747
LICENSED PROFESSIONAL ENGINEER
5/30/03

PAPE-DAWSON ENGINEERS
555 EAST RAMSEY | SAN ANTONIO TEXAS 78216 | PHONE: 210.375.9000 FAX: 210.375.9010

SUMMERGLEN, UNIT 5A-3
SAN ANTONIO, TEXAS
DRAIN "B" PLAN & PROFILE (PHASE 2)

PLAT NO. 030284

JOB NO. 4042-29
DATE MAY 2003
DESIGNER DPH
CHECKED BT DRAWN JR
SHEET 6.1

Date: May 28, 2003, 3:49pm User ID: JRobinson
File: K:\4042\29\design\civil\PP404229-CH.dwg

THIS DOCUMENT HAS BEEN PRODUCED FROM MATERIAL THAT WAS STORED AND/OR TRANSMITTED ELECTRONICALLY AND MAY HAVE BEEN INADVERTENTLY ALTERED. RELY ONLY ON FINAL HARDCOPY MATERIALS BEARING THE CONSULTANT'S ORIGINAL SIGNATURE AND SEAL.

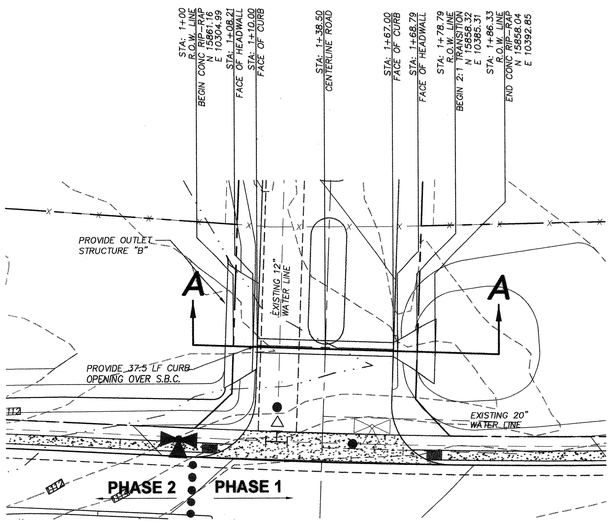

DRAIN "A"

SCALE : 1"=30'

SCALE : VERTICAL 1"=30'
HORIZONTAL 1"=5'

BOX CULVERT HYDRAULICS

$Q = 71.38cfs$
$Bw = 6\ ft$
$N = 0.013$
$S = 0.30\%$
$V = 6.72fps$
$C_D = 1.64ft$
$D = 1.77ft$
$VEL\ HEAD = \frac{V^2}{2g} = 0.70ft$
$A = 10.6\ ft^2$

CURB OPENING

$Q = CL(h)^{3/2}$

$L = \frac{Q}{C(h)^{3/2}}$

$L = \frac{51.36}{3.087(0.583)^{3/2}}$

$L = 37.37'$

$L = 37.5'$ (USE)

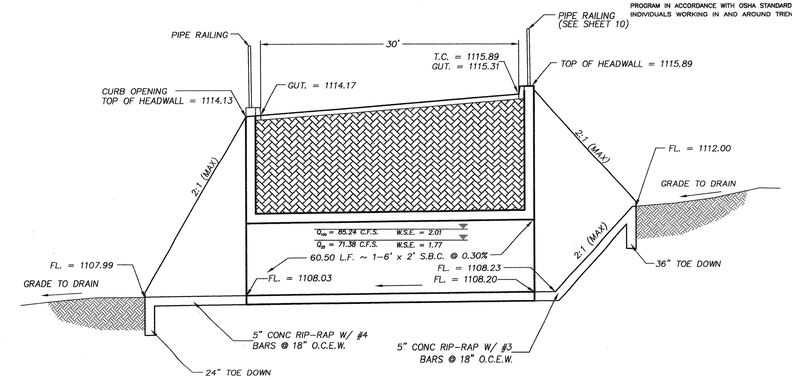

SECTION A:A

(NOT TO SCALE)

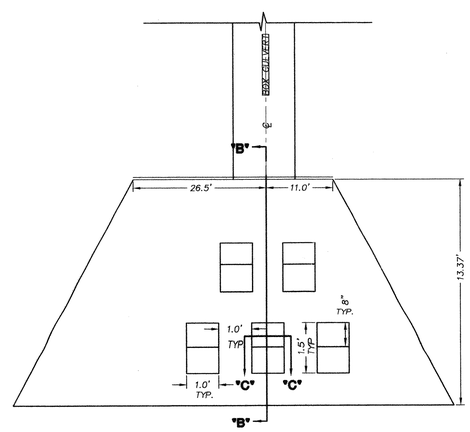

NOTE: SEE SHEET 5 FOR CROSS SECTIONS.

OUTLET STRUCTURE "B" DETAIL

N.T.S.

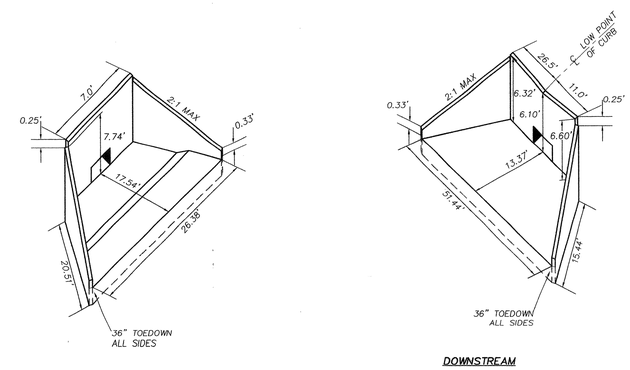

CONCRETE RIP-RAP DETAIL

(NOT TO SCALE)

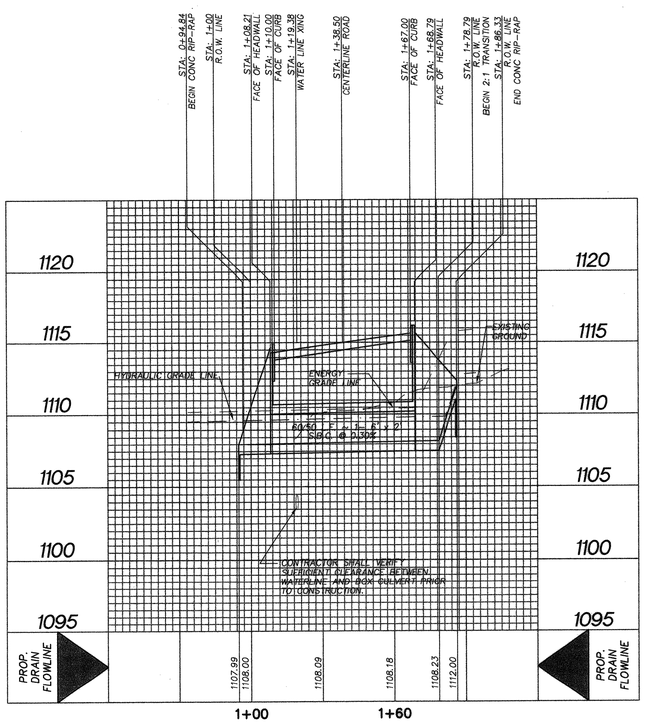

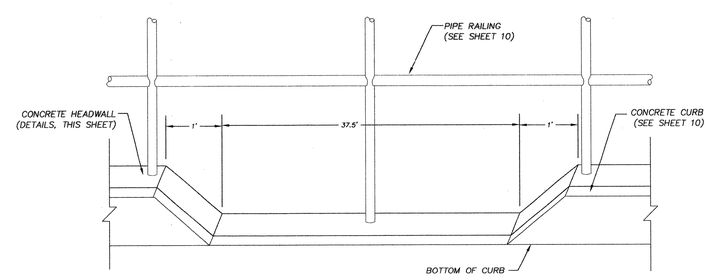

CURB OPENING DETAIL

(NOT TO SCALE)

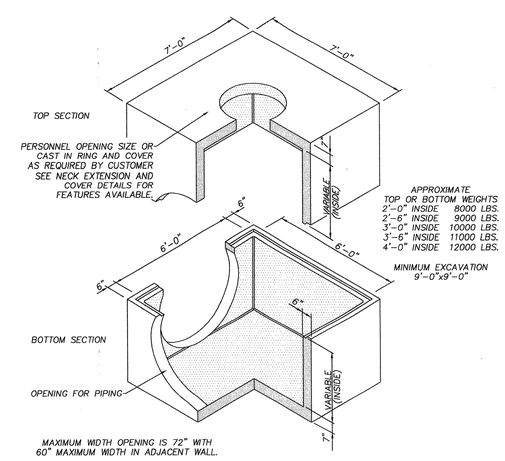

6'-0"x6'-0" NEWBASIS® 66-J 2-PIECE JUNCTION BOX

NOT-TO-SCALE

TRENCH EXCAVATION SAFETY PROTECTION

CONTRACTOR AND/ OR CONTRACTOR'S INDEPENDENTLY RETAINED EMPLOYEE OR STRUCTURAL DESIGN/GEOTECHNICAL/SAFETY/EQUIPMENT CONSULTANT, IF ANY, SHALL REVIEW THESE PLANS AND ANY AVAILABLE GEOTECHNICAL INFORMATION AND THE ANTICIPATED INSTALLATION SITES WITHIN THE PROJECT WORK AREA IN ORDER TO IMPLEMENT CONTRACTOR'S TRENCH EXCAVATION SAFETY PROTECTION SYSTEMS, PROGRAMS AND/OR PROCEDURES FOR THE PROJECT DESCRIBED IN THE CONTRACT DOCUMENTS. THE CONTRACTOR'S IMPLEMENTATION OF THESE SYSTEMS, PROGRAMS AND/OR PROCEDURES SHALL PROVIDE FOR ADEQUATE TRENCH EXCAVATION SAFETY PROTECTION THAT COMPLY WITH AS A MINIMUM, OSHA STANDARDS FOR TRENCH EXCAVATIONS. SPECIFICALLY, CONTRACTOR AND/OR CONTRACTOR'S INDEPENDENTLY RETAINED EMPLOYEE OR SAFETY CONSULTANT SHALL IMPLEMENT A TRENCH SAFETY PROGRAM IN ACCORDANCE WITH OSHA STANDARDS GOVERNING THE PRESENCE AND ACTIVITIES OF INDIVIDUALS WORKING IN AND AROUND TRENCH EXCAVATION.

REVISIONS:

STATE OF TEXAS
BRICE B. MOCZYGEMBA
65747
LICENSED
PROFESSIONAL ENGINEER
5/30/03

PAPE-DAWSON ENGINEERS
555 EAST RAMSEY | SAN ANTONIO TEXAS 78216 | PHONE: 210.375.9000 FAX: 210.375.9010

SUMMERGLEN, UNIT 5A-3
SAN ANTONIO, TEXAS
DRAIN "A" PLAN & PROFILE

PLAT NO. 030284

JOB NO. 4042-29
DATE MAY 2003
DESIGNER DPH
CHECKED BT DRAWN WJS
SHEET 6

Date: May 30, 2003, 11:05am User ID: wsilford
File: K:\4042\29\Design\civil\PP4042Z9-5A.dwg

THIS DOCUMENT HAS BEEN PRODUCED FROM MATERIAL THAT WAS STORED AND/OR TRANSMITTED ELECTRONICALLY AND MAY HAVE BEEN INADVERTENTLY ALTERED. RELY ONLY ON FINAL HARDCOPY MATERIALS BEARING THE CONSULTANT'S ORIGINAL SIGNATURE AND SEAL.

SCALE : VERTICAL 1"=50'
HORIZONTAL 1"=5'

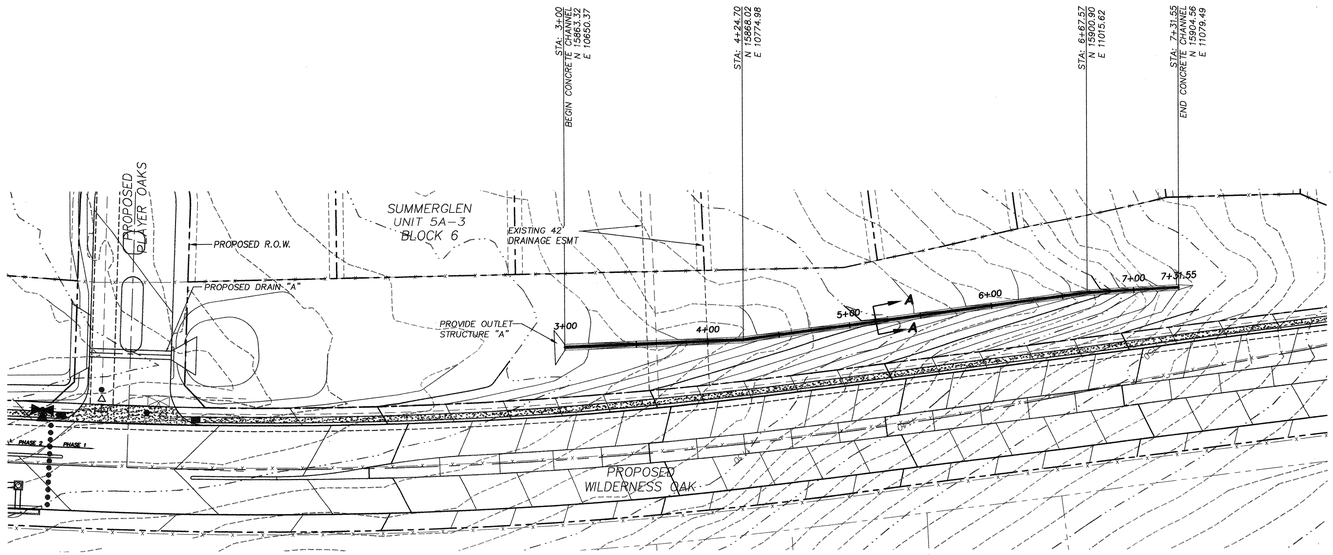

DRAINAGE CHANNEL

SCALE : 1"=50'

NOTES:

1. EXISTING TOPO SHOWN IS BASED ON AERIAL TOPOGRAPHY. THERE IS NO GUARANTEE THE TOPO SHOWN IS ACCURATE. PRIOR TO CONSTRUCTION THE CONTRACTOR SHALL VERIFY ALL EXISTING GROUND ELEVATIONS AND IMMEDIATELY NOTIFY ENGINEER OF ANY DISCREPANCIES. IF CONTRACTOR DOES NOT ACCEPT EXISTING TOPO AS SHOWN ON PLANS, WITHOUT EXCEPTION, HE SHALL HAVE MADE AT HIS OWN EXPENSE, A TOPO SURVEY BY A REGISTERED LAND SURVEYOR AND SUBMIT IT TO THE ENGINEER FOR REVIEW.
2. THE CONTRACTOR SHALL HAVE NO CLAIM FOR CHANGE ORDERS WHICH WOULD INCREASE THE COST FOR CONSTRUCTION DUE TO THE CONTRACTORS FAILURE TO NOTIFY ENGINEER OF DISCREPANCIES PRIOR TO CONSTRUCTION.
3. THE CONTRACTOR SHALL ESTABLISH VEGETATION FOR ALL DISTURBED AREAS ON BOTH SIDES OF CONCRETE DRAINAGE CHANNEL PER CITY OF SAN ANTONIO HYDROMULCH STANDARD SPECIFICATION. CONCTRACTOR SHALL MAINTAIN SLOPE UNTIL VEGETATION IS ESTABLISHED.

LEGEND

—·—·—·—1120—·—·—·— EXISTING CONTOURS

————1120———— PROPOSED CONTOURS

TABLE OF DIMENSIONS				
DRAIN STRUCTURE	A	B	C	D
"A"	2.5'	2.5'	2.0'	1.0'
"B"	8.37'	3.0'	2.0'	1.86'

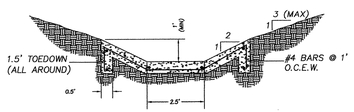

SECTION A-A
DRAINAGE CHANNEL DETAIL

N.T.S.

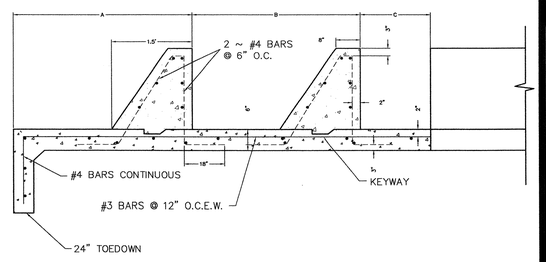

SECTION "B-B"
BASIN DETAIL

N.T.S.

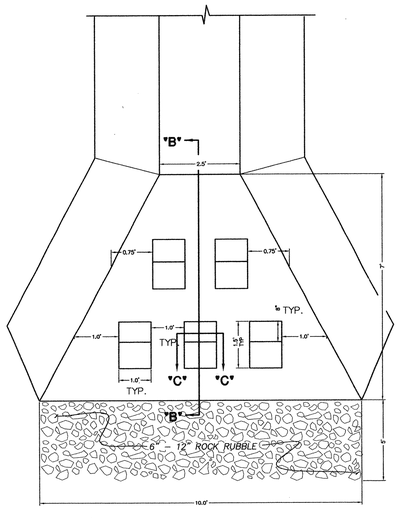

OUTLET STRUCTURE "A" DETAIL

N.T.S.

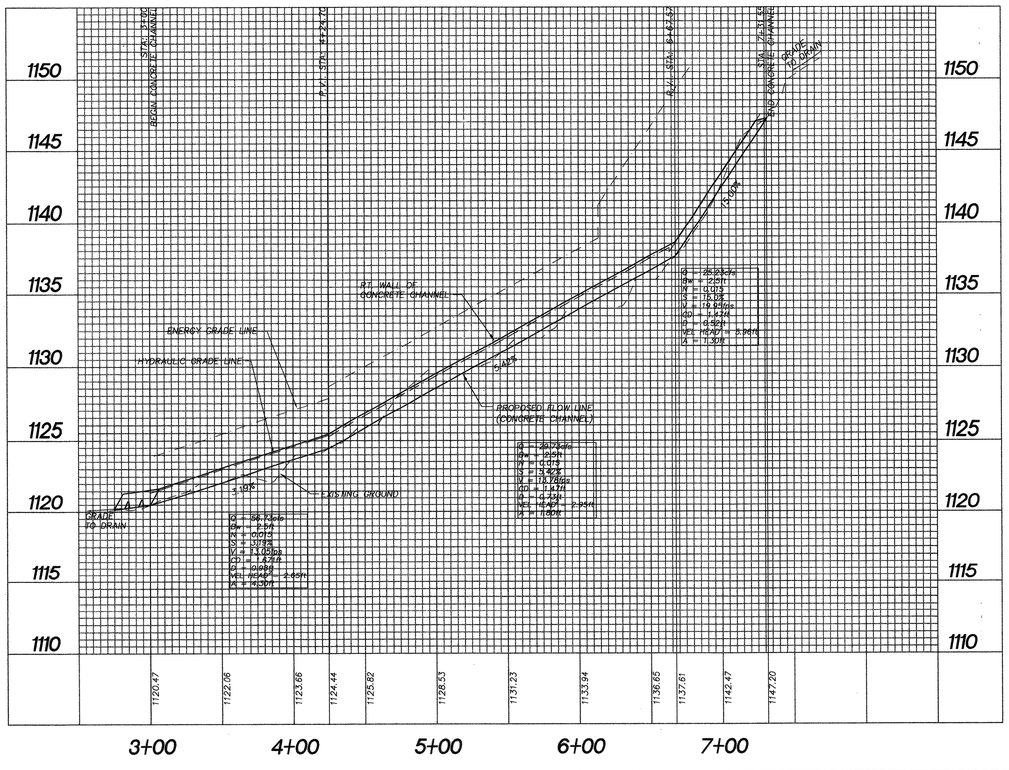

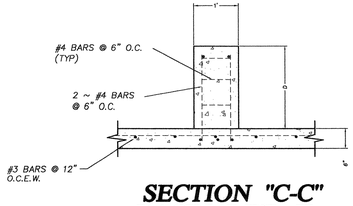

SECTION "C-C"
BASIN DETAIL

N.T.S.

REVISIONS.

STATE OF TEXAS
BRICE B. MOCZYGEMBA
65747
LICENSED PROFESSIONAL ENGINEER
5/30/03

PAPE-DAWSON ENGINEERS
555 EAST RAMSEY | SAN ANTONIO TEXAS 78216 | PHONE: 210.375.9000 FAX: 210.375.9010

SUMMERGLEN, UNIT 5A-3
SAN ANTONIO, TEXAS
DRAINAGE CHANNEL PLAN & PROFILE

PLAT NO. 030284

JOB NO.	4042-29
DATE	MAY 2003
DESIGNER	DH
CHECKED	BT
DRAWN	WJS
SHEET	5

Date: May 28, 2003, 2:57pm User ID: JRobinson
File: K:\4042\29\design\civil\PP404229-Ch.dwg
THE DOCUMENT WAS BEEN PRODUCED FROM MATERIAL THAT WAS STORED AND/OR TRANSMITTED ELECTRONICALLY AND MAY HAVE BEEN INADVERTENTLY ALTERED. RELY ONLY ON FINAL HARDCOPY MATERIALS BEARING THE CONSULTANTS ORIGINAL SIGNATURE AND SEAL.

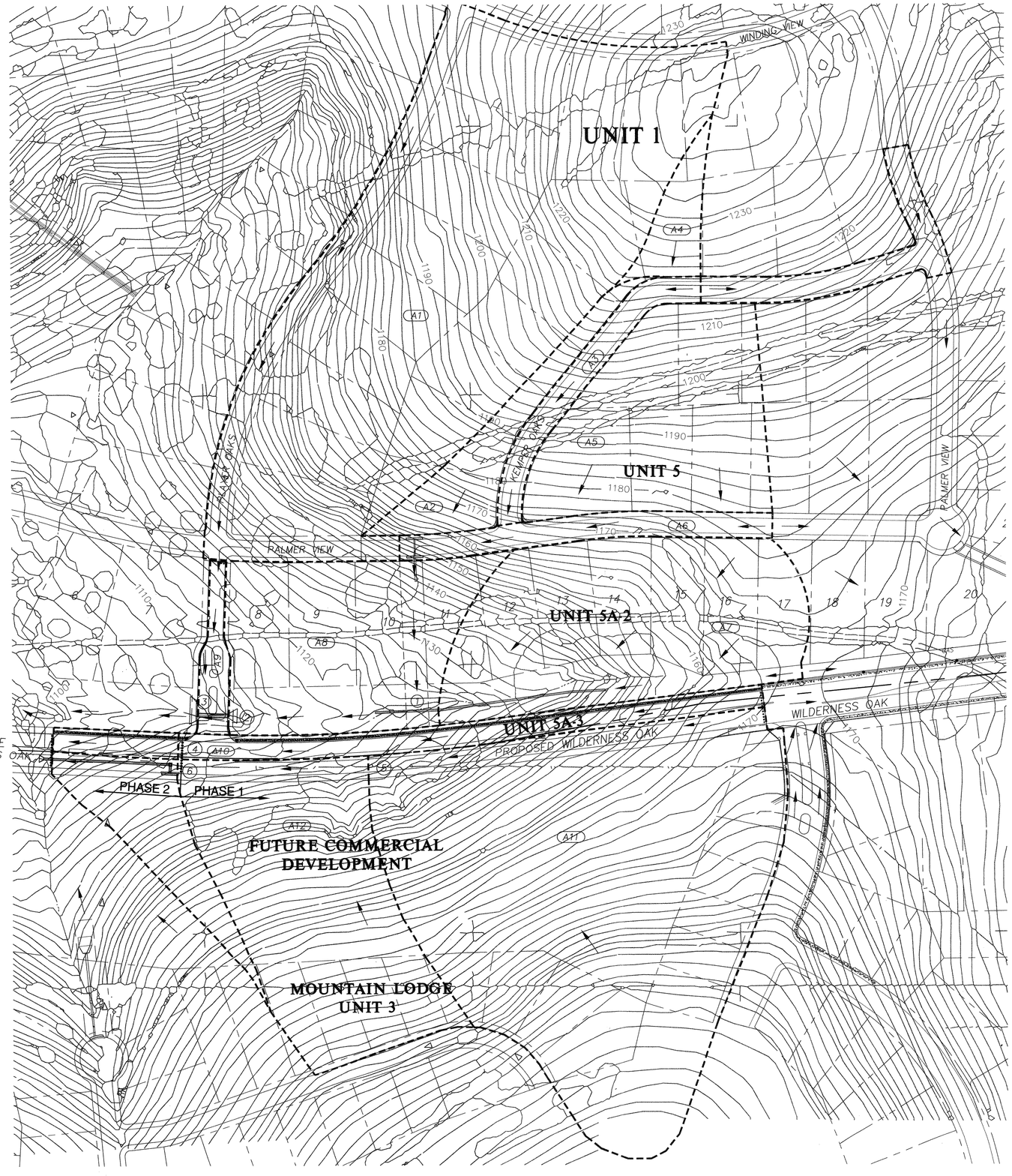

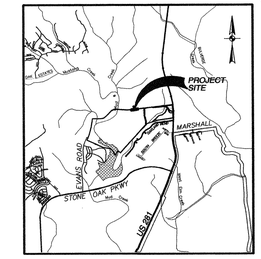

LOCATION MAP
N.T.S.

SCALE:1" = 100'

LEGEND

- WATERSHED BOUNDARY
- (1) STUDY POINT
- (A6) DRAINAGE AREA
- FLOW ARROW

NOTE:

THE APPROVED TCEQ WATER POLLUTION PLAN/WPAP FOR WILDERNESS OAK DOES NOT INCLUDE THE PROPOSED COMMERCIAL AREA LOCATED SOUTH OF THIS PROJECT. DRAINAGE FROM THE FUTURE COMMERCIAL DEVELOPMENT MUST BE DRAINED TO A SEPARATE WPAP AND WILL NOT BE DRAINED TO WILDERNESS OAK.

RUNOFF COMPUTATIONS

STUDY POINT	AREA (ACRES) INCREMENT	AREA (ACRES) ACCUMULATION	TC MIN	C	I	Q CFS	FREQ. YRS.
1	–	A2+A3+A4+A5 +A6+A7=10.59	10	0.72	7.44	56.73	25
2	3.16	1+A8=13.75	11	0.72	7.21	71.38	25
3	0.32	A1+A9=10.22	12	0.72	6.98	51.36	25
4	1.11	A10 = 1.11	5.0	0.98	8.76	9.53	25
5	9.96	A11 = 9.96	10	0.88	7.44	65.21	25
6	4.18	A11 + A12 = 14.14	11	0.89	7.21	89.72	25

REVISIONS:

STATE OF TEXAS
BRICE B. MOCZYGEMBA
65747
LICENSED
PROFESSIONAL ENGINEER

Brice Moczygemba 5/30/03

PAPE-DAWSON ENGINEERS
555 EAST RAMSEY | SAN ANTONIO TEXAS 78216 | PHONE: 210.375.9000 FAX: 210.375.9010

SUMMERGLEN, UNIT 5A-3
SAN ANTONIO, TEXAS
OVERALL DRAINAGE PLAN

PLAT NO. 030284

JOB NO. 4042-29
DATE MAY 2003
DESIGNER DH
CHECKED BT DRAWN WJS
SHEET 4

Date: May 28, 2003, 3:42pm User ID: JRobinson
File: K:\4042\29\design\civil\OD404229.dwg

THIS DOCUMENT HAS BEEN PRODUCED FROM MATERIAL THAT WAS STORED AND/OR TRANSMITTED ELECTRONICALLY AND MAY HAVE BEEN INADVERTENTLY ALTERED. RELY ONLY ON FINAL HARDCOPY MATERIALS BEARING THE CONSULTANT'S ORIGINAL SIGNATURE AND SEAL.

TRENCH EXCAVATION SAFETY PROTECTION

Contractor and/ or Contractor's independently retained employee or structural design/geotechnical/safety/equipment consultant, if any, shall review these plans and any available geotechnical information and the anticipated installation sites within the project work area in order to implement contractor's trench excavation safety protection systems, programs and/or procedures for the project described in the contract documents. The Contractor's implementation of these systems, programs and/or procedures shall provide for adequate trench excavation safety protection that comply with as a minimum, OSHA standards for trench excavations. Specifically, Contractor and/or Contractor's independently retained employee or safety consultant shall implement a trench safety program in accordance with OSHA standards governing the presence and activities of individuals working in and around trench excavation.

NOTE: The City of San Antonio as part of its electric and gas system (City Public Service Board) is hereby dedicated the easements and right-of-way for electric and gas distribution and service facilities in the areas designated on this plat as "Electric Easement," "Gas Easement," "Anchor Easement," "Service Easement," "Overhang Easement," "Utility Easement," and "Transformer Easement" for the purpose of installing, constructing, reconstructing, maintaining, removing, inspecting, patrolling, and erecting poles, hanging or burying wires, cables, conduits, pipelines or transformers, each with its necessary appurtenances together with the right of ingress and egress over grantor's adjacent land, the right to relocate said facilities within said easement and right-of-way areas, and the right to remove from said lands all trees or parts thereof, or other obstructions which endanger or may interfere with the efficiency of said lines or appurtenances thereto. It is agreed and understood that no buildings, concrete slabs, or walls will be placed within said easement area.

Any CPS monetary loss resulting from modifications required of CPS equipment, located within said easement, due to grade changes or ground elevation alterations shall be charged to the person or persons deemed responsible for said grade changes or ground elevation alteration.

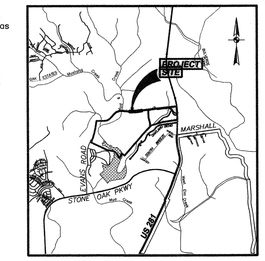

LOCATION MAP
N.T.S.

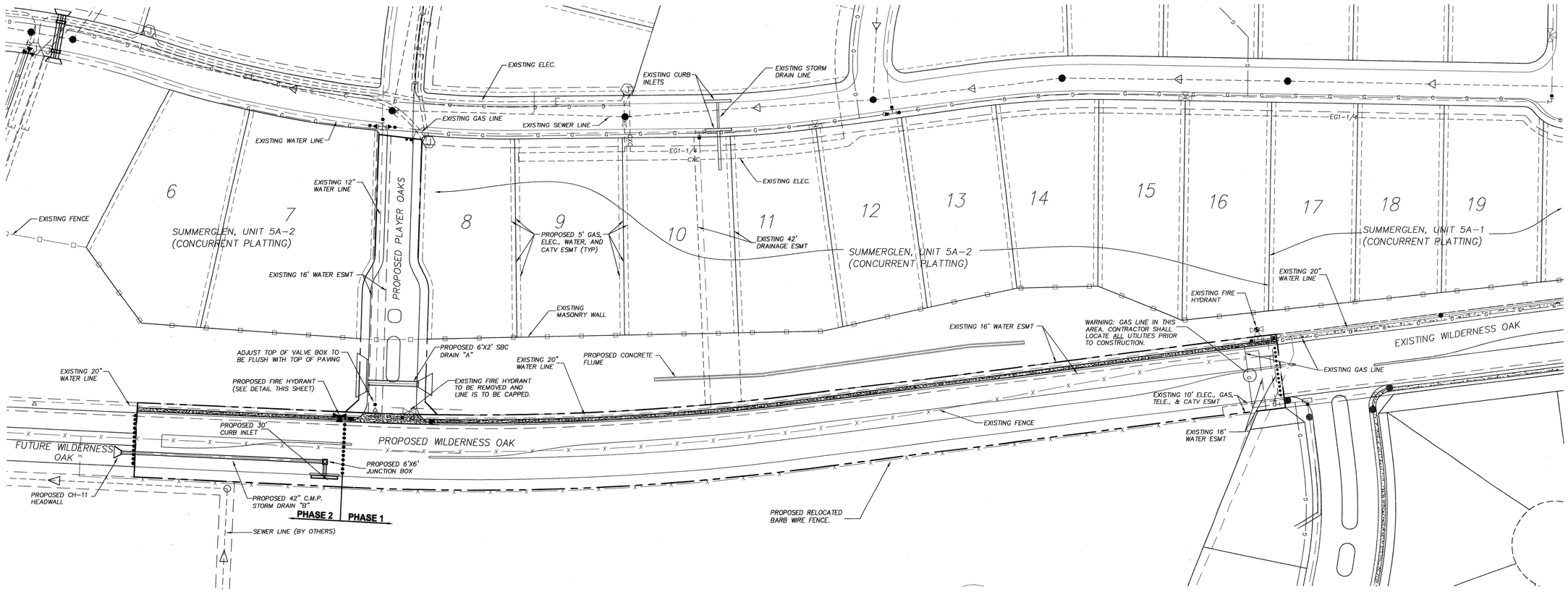

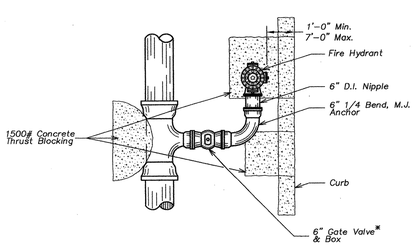

FIRE HYDRANT INSTALLATION
NOT-TO-SCALE

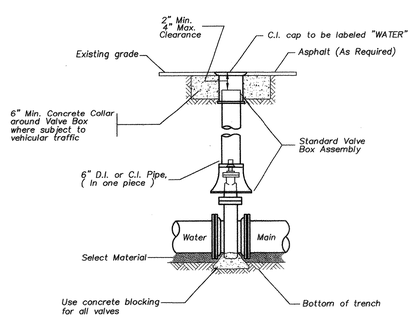

INSTALLATION OF NON-GEARED VALVE AND VALVE BOX WITH EXTENSION
NOT-TO-SCALE

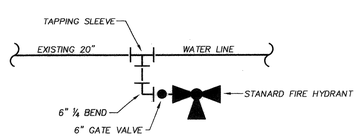

1 ~ 6" GATE VALVE
1 ~ 6" VALVE BOX, COMPLETE
1 ~ STANDARD FIRE HYDRANT*
1 ~ 6" 1/4 BEND, M.J. ANCHOR
1 ~ 6" TAPPING SLEEVE
6" PIPE, CUT AS REQUIRED
*N 15821.53
E 10285.28

INSET DETAIL
NOT-TO-SCALE

NOTE: NORTHING AND EASTING ARE TO THE CENTER OF FIRE HYDRANT

LEGEND

PROPOSED CONC. SIDEWALK
EXISTING CONC. SIDEWALK
EXISTING ELECTRIC JUNCTION BOX
EXISTING SEWER (MANHOLE)
EXISTING WATER (FIRE HYDRANT)
EXISTING ELECTRIC (TRANSFORMER)
BARB WIRE FENCE
MASONRY WALL

SCALE : 1"=60'
0' 60' 120' 180'

REVISIONS:

STATE OF TEXAS
BRICE B. MOCZYGEMBA
65747
LICENSED PROFESSIONAL ENGINEER
9/30/03

PAPE-DAWSON ENGINEERS
555 EAST RAMSEY | SAN ANTONIO TEXAS 78216 | PHONE: 210.375.9000 FAX: 210.375.9010

SUMMERGLEN, UNIT 5A-3
SAN ANTONIO, TEXAS
OVERALL UTILITY LAYOUT

PLAT NO. 030284

JOB NO.	4042-29
DATE	MAY 2003
DESIGNER	DH
CHECKED BT	DRAWN WJS
SHEET	3

Date: May 30, 2003, 11:07am User ID: westlard
File: K:\4042\29\design\civil\OU\404229.dwg

THIS DOCUMENT HAS BEEN PRODUCED FROM MATERIAL THAT WAS STORED AND/OR TRANSMITTED ELECTRONICALLY AND MAY HAVE BEEN INADVERTENTLY ALTERED. RELY ONLY ON FINAL HARDCOPY MATERIALS BEARING THE CONSULTANT'S ORIGINAL SIGNATURE AND SEAL.

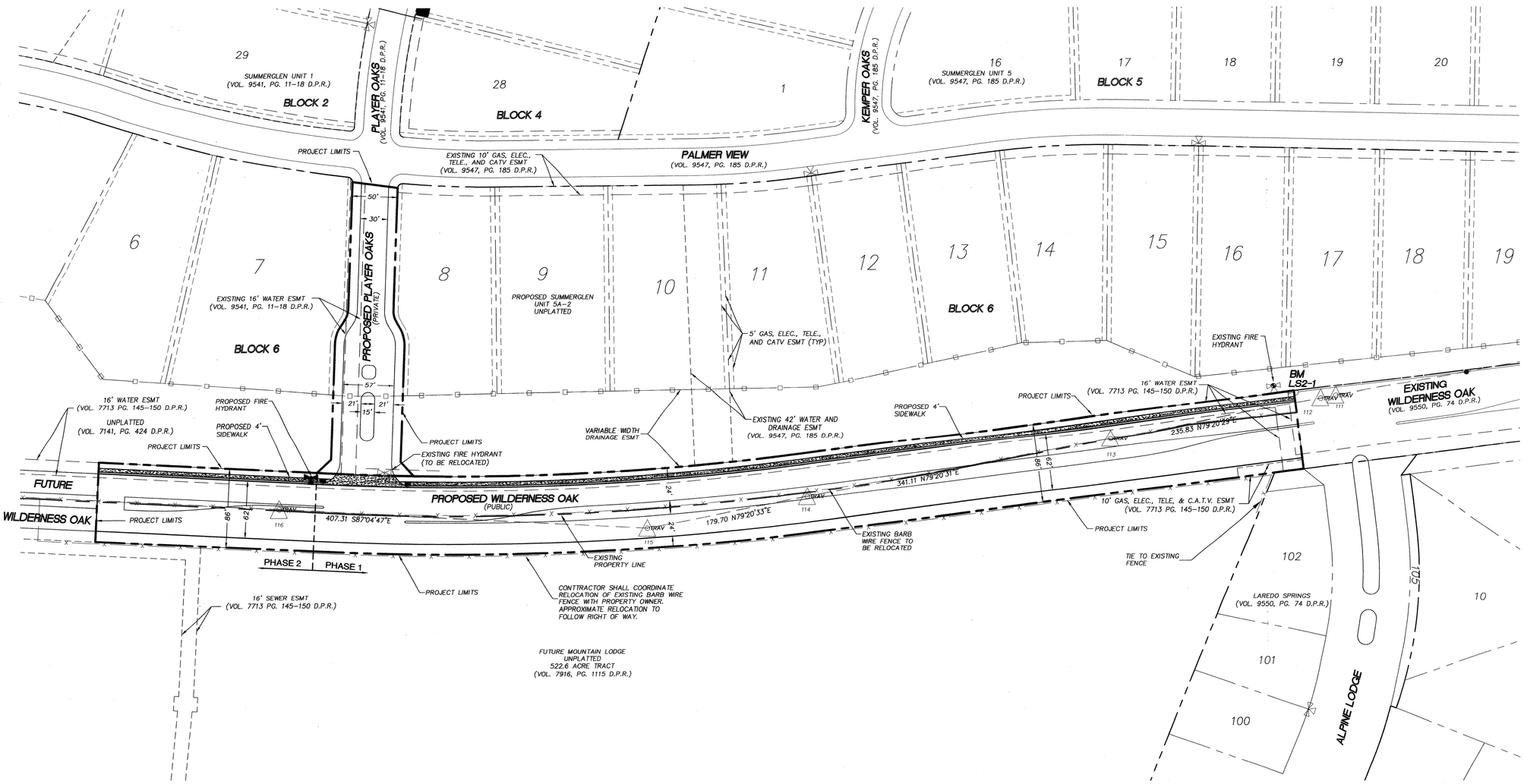

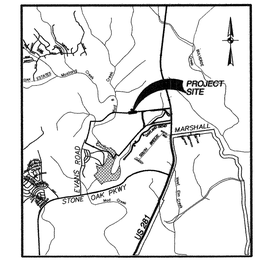

LOCATION MAP
N.T.S.

LEGEND

- PROPOSED FIRE HYDRANT
- EXISTING FIRE HYDRANT
- PROPOSED 4' SIDEWALK
- LIMITS OF CONSTRUCTION
- TRAV. CONTROL POINT
- BARB WIRE FENCE
- MASONRY WALL

BENCHMARKS

BM LS2-1
"X" ON TOP BOLT OF FIRE HYDRANT
ELEVATION = 1172.32

TRAVERSE CONTROL POINTS

POINT	NORTHING	EASTING
110	15968.36	11736.55
111	15908.82	11417.21
112	15905.71	11400.49
113	15862.09	11168.73
114	15799.00	10833.50
115	15765.77	10656.90
116	15786.52	10250.12

SCALE : 1"=60'

0' 60' 120' 180'

REVISIONS:

STATE OF TEXAS
BRUCE B. MOCZYGEMBA
65747
LICENSED
PROFESSIONAL ENGINEER
5/30/03

PAPE-DAWSON ENGINEERS
555 EAST RAMSEY | SAN ANTONIO TEXAS 78216 | PHONE: 210.375.9000 FAX: 210.375.9010

SUMMERGLEN, UNIT 5A-3
SAN ANTONIO, TEXAS
OVERALL SITE PLAN
WITH PROJECT BENCHMARKS

PLAT NO. 030284

JOB NO. 4042-29
DATE MAY 2003
DESIGNER DH
CHECKED BT DRAWN WJS
SHEET 2

Date: May 30, 2003, 11:38am User ID: wesford
File: K:\4042\29\design\civil\DA404229.dwg

THIS DOCUMENT HAS BEEN PRODUCED FROM MATERIAL THAT WAS STORED AND/OR TRANSMITTED ELECTRONICALLY AND MAY HAVE BEEN INADVERTENTLY ALTERED. RELY ONLY ON FINAL HARDCOPY MATERIALS BEARING THE CONSULTANT'S ORIGINAL SIGNATURE AND SEAL.

CITY OF SAN ANTONIO
DEPT. OF PLANNING
OFFICE OF PLANNING
RECEIVED 03 JUN 10 AM 8 20
03 JUN -9 PM 3:06
LAND DEVELOPMENT SERVICES DIVISION

SUMMERGLEN, UNIT 5A-3

WILDERNESS OAK (PUBLIC)
PLAYER OAKS (PRIVATE)

SAN ANTONIO, TEXAS

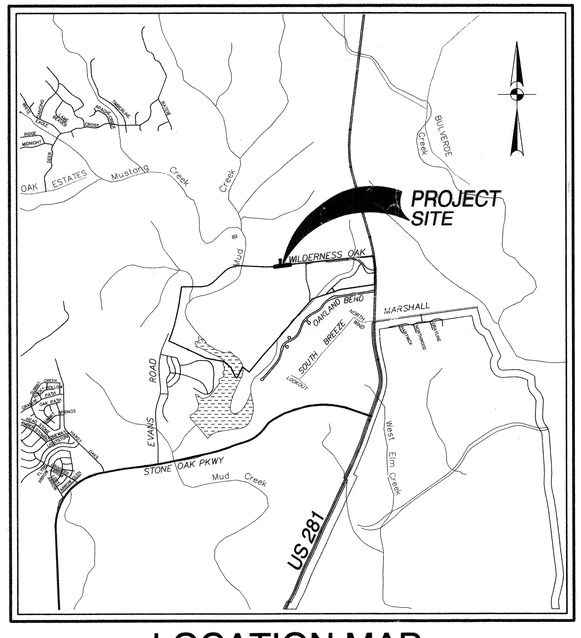

LOCATION MAP
N.T.S.

SHEET INDEX

Description	Sheet No.
COVER SHEET	1
OVERALL SITE PLAN WITH PROJECT BENCH MARKS	2
OVERALL UTILITY LAYOUT	3
OVERALL DRAINAGE PLAN	4
DRAINAGE CHANNEL PLAN AND PROFILE	5
DRAIN "A" PLAN AND PROFILE	6
DRAIN "B" PLAN AND PROFILE (PHASE 2)	6.1
BOX CULVERT DETAIL SHEET	7
WILDERNESS OAK STREET PLAN AND PROFILE	8
PLAYER OAKS STREET PLAN AND PROFILE	9
STREET DETAIL SHEET	10

file 427-C

SOUTHERLAND PROPERTIES
9670 RANCH ROAD 12
WIMBERLEY, TEXAS 78676
PHONE (512) 847-5263

MAY 2003

PAPE-DAWSON ENGINEERS
555 EAST RAMSEY | SAN ANTONIO TEXAS 78216 | PHONE: 210.375.9000 FAX: 210.375.9010

STATE OF TEXAS
BRICE B. MOCZYGEMBA
65747
LICENSED PROFESSIONAL ENGINEER
5/30/03

PLAT NO. 030284
JOB NO. 4042-29

Date: May 28, 2003, 3:58pm User ID: JRobinson
File: K:\4042\29\design\Civil\N4042-29.dwg
THIS DOCUMENT HAS BEEN PRODUCED FROM MATERIAL THAT WAS STORED AND/OR TRANSMITTED ELECTRONICALLY AND MAY HAVE BEEN INADVERTENTLY ALTERED. RELY ONLY ON FINAL HARDCOPY MATERIALS BEARING THE CONSULTANT'S ORIGINAL SIGNATURE AND SEAL.

CITY OF SAN ANTONIO

POADP APPLICATION

The platting of property in two or more subdivision units requires the submission of a Preliminary Overall Development Plan, POADP. To be accepted for review a POADP shall comply with the provisions of ARTICLE II, Division 2 Preliminary Overall Development Plans of the San Antonio Unified Development Code and must be certified to contain the following:

Date Submitted: March 11, 1998

Name of POADP: ~~Canyon Springs Estates~~ SUMMERLIN ±362 Acre Tract

Owners: Summerlin Properties c/o Charles D. Patterson

Consulting Firm: Pape-Dawson Engineers, Inc.

Address: P.O. Box 1629
Wimberly, TX 78676

Address: 555 East Ramsey
San Antonio, TX 78216

Phone: 512/847-5263

Phone: 210/375-9000

Existing zoning: N/A

Proposed zoning N/A

Site is over/within/includes:

Edwards Aquifer Recharge Zone:		☒ Yes ☐ No
Projected # of Phases:	4	☒ Yes ☐ No
San Antonio City Limits?		☐ Yes ☒ No
Council District:	N/A	
Ferguson map grid	451 CB	

Land area being platted:

	Lots	Acres
Single Family (SF)	±452	±362
Multi-family (MF)	0	0
Commercial and non-residential	±0	±0

Is there a previous POADP for this Site? Name Canyon Springs No. 427

Is there a corresponding PUD for this site? Name Future Submittal No.

Plats associated with this POADP or site? Name ~~Canyon Springs Estates~~ SUMMERLIN-UNIT 1 No. 980362

Name No.

Name No.

Contact Person and authorized representative:

Print Name: John-Mark Matkin Signature: John Mark Matkin

Date: March 11, 1998 Phone: 210/375-9000 Fax: 210/375-9010

4042\00\WORD\FORMS\980317A1

☒ name of the POADP and the subdivision;

☒ indication of development phases on the POADP;

☒ perimeter property lines of the POADP (in a line weight and character distinguishable from other lines);

☒ north arrow and scale of the map;

☒ proposed land use by location, type and acreage;

☒ delineation of the circulation system including all collectors, arterial, and local type "B" streets;

☒ contour lines at intervals no greater than ten (10) feet;

☒ legal recorded ownership of adjacent properties and if known proposed development of adjacent unimproved properties;

☒ existing adjacent or perimeter streets;

☒ one hundred year flood plain limits;

☒ location map indicating location and distance of the POADP to adjacent streets and at least two (2) major thoroughfares.

☒ a complete application and certification with six copies of the POADP map, all maps to be folded (accordion style & manageable size);

☒ POADP amendments or revisions must be graphically indicated and include a concise statement describing said amendment or revision on the POADP map;

☒ TIA requirements must be met prior to acceptance of a POADP, contact Amer Galani @ (210)207-2076;

☒ Tree preservation requirements must be met prior to acceptance of a POADP, contact Debbie Reid @207-7102;

☒ the POADP ☒ does ☐ does not abut State Highway Department facilities and one additional copy of the POADP plan has been submitted directly to TXDOT for their review. Contact Judy Friesenhahen @ (210) 615-5814;

☒ The POADP ☒ is ☐ is not located over the Edwards Aquifer recharge zone and one additional copy of the POADP has been submitted directly to the Aquifer Studies office of San Antonio Water Systems, contact Kirk Nixon (210) 704-7392;

I certify that the POADP application and accompanying maps are complete and that the conditions listed on this application have been met.

Certifying Representative:

Print Name: Charles D. Patterson Signature: John-Mark Matkin

JOHN-MARK MATKIN

If you have any questions please call Elizabeth Carol at 207-7900

CITY OF SAN ANTONIO

May 29, 1998

John Mark Matkin
Pape Dawson Engineers, Inc.
555 East Ramsey
San Antonio, TX 78216

Re: Summerlin + 362 Acre Tract POADP # 427 -C

Dear Mr. Matkin:

The City Staff Development Review Committee has reviewed Summerlin +362 Acre Tract Subdivision Preliminary Overall Area Development Plan # 427 - C. Please find enclosed a signed copy for your files. Although your plan was accepted, please note the following:

- Based on the topography, a Flood Plain Study and drainage review will probably be required during the platting process.
- In consideration of public safety and convenience, excessive grades by reason of topography should be avoided in street layouts and arrangements.
- This development will probably need to conform to requirements associated with development over the Edwards Aquifer. For additional information about these requirements you can contact SAWS at 704-7305.
- Access and R.O.W. issues along State facilities will need to be resolved with the Texas Department of Transportation (TXDOT). For information about these requirements you can contact TXDOT at 615-5814.
- If Wilderness Oaks is developed as a pilot project, it will probably require a 110' of ROW.
- This development will need to comply with tree preservation ordinance #85262. For information about these requirements you can contact Building Inspections at 207-7102.
- It will be expected that you will plat all of the property depicted in your POADP, to include: floodpains, drainage areas and open space.

PLANNING DEPARTMENT • P.O. BOX 839966 • SAN ANTONIO, TEXAS 78283-3966
TEL: (210) 207-7900 TTY: (210) 207-7911 FAX: (210) 207-4441

- I would encourage you to work closely with the school district, so that they can plan accordingly.

Please note that this action by the committee does not establish any commitment for the provision of utilities, services or zoning of any type now or in the future by the City of San Antonio. If the proposed development is not platted in phases this POADP will be invalid. Platting will have to comply with the UDC.

If you have any questions or comments regarding this matter, please contact Ms. Elizabeth Carol, at (210) 207-7900.

Sincerely,

Emil R. Moncivais AIA, AICP
Director of Planning

EM/EAC

cc: Andrew J. Ballard, P. E., City Engineer

REMIT TO:
CITY OF SAN ANTONIO
P.O. BOX 839975
SAN ANTONIO, TX 78283-3975

INVOICE
1105033

AMT ENCLOSED _____

AMOUNT DUE	370.00
INVOICE DATE	3/10/1998
DUE DATE	3/10/1998

50-04-5573
M W CUDD ENGINEERS
10325 BANDERA
SATX 78250

PHONE: 000 - 0000

POADP CANYON ESTATES

FACILITY LOCATION: 100 COMMERCE ST W

INVOICE DATE	INVOICE	ACCOUNT	DUE DATE	OFFICE HOURS
3/10/1998	1105033	50-04-5573	3/10/1998	7:45 - 4:30

LINE	INDEX REF	DESCRIPTION	AMOUNT
1	012542-001	PLAN REVIEW FEES	370.00

MAR 1 1 1998

PAID SATO. ME-3

AGREEMENT DATES	SERVICE DATES	ORDINANCE	CONTRACT	DOCUMENT
ST:	03/09/1998		CK4298	CANYONESTATES
END	03/09/1998			

PREVIOUS BAL	CURRENT CHARGES	NEW BALANCE	TOTAL AMT DUE
0.00	370.00	370.00	370.00

CITY OF SAN ANTONIO
PLANNING-FOURTH FLOOR P.O. BOX 839975 SAN ANTONIO, TX 78283-3975