CITY OF SAN ANTONIO
DEVELOPMENT SERVICES DEPARTMENT

March 1, 2013

Brian Parker, P. E.
Kimley-Horn and Associates, Inc.
601 NW Loop 410, Suite 350
San Antonio, Texas, 78216

Re: **Ciudad De Las Palomas** **MDP # 007-11**

Dear Mr. Parker,

The Development Review Committee evaluated the **Ciudad De Las Palomas** Master Development Plan, or **MDP # 007-11**. Enclosed is an accepted and signed copy of the MDP for your files. However, please note the following conditions:

It will be expected that all of the property depicted in the Master Development Plan including but not limited to floodplains, drainage areas, and open space shall be platted. All platting shall comply with the Unified Development Code (UDC), the City's Master Plan, Major Thoroughfare Plan, and all applicable regulations for the City of San Antonio.

Please note that this action by the committee does not establish any commitment or support for the provision of drainage, utilities, services, or zoning of any type now or in the future by the City of San Antonio. In addition, it is suggested to work closely with the school district, so they can plan for the development accordingly.

The validity for this project shall expire within twenty-four months from the date of acceptance in accordance with UDC §35-412(i)(1). Should you need further assistance, please contact Donna Camacho, Planner (210) 207-5016.

Sincerely,

John P. Jacks
Assistant Director

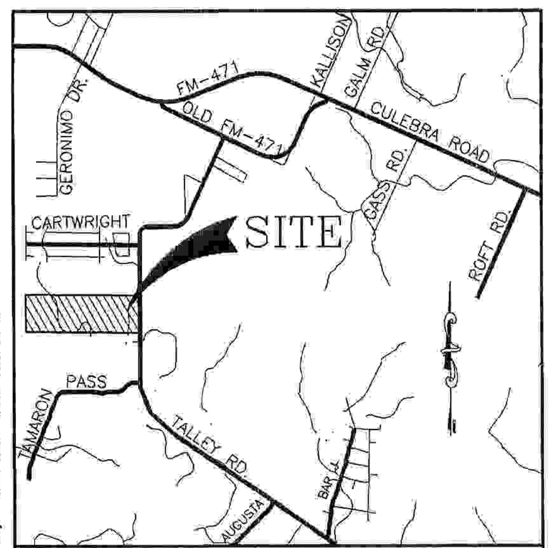

LOCATION MAP
NOT TO SCALE

MAPSCO NO. 576 B4-C4

OWNER/DEVELOPER:
JD PROPERTIES
5150 BROADWAY, SUITE 288
SAN ANTONIO, TEXAS 78209
PH: (210) 824-7828
CONTACT: JIM DANIELL

ENGINEER:
KIMLEY-HORN AND ASSOCIATES, INC.
601 NW LOOP 410, SUITE 350
SAN ANTONIO, TEXAS 78216
PH: (210) 541-9166
FAX: (210) 541-8699
CONTACT: BRIAN J. PARKER, P.E.

LAND USE TABLE

UNIT	LAND USE	ACREAGE	NUMBER OF DWELLING UNITS	NUMBER OF LOTS	DENSITY (UNITS PER ACRE)	REQUIRED PARK/OPEN SPACE (ACRES)	FLOODPLAIN (ACRES)
1A	SINGLE FAMILY	16.18	---	10	0.6	0.15	11.59
1B	SINGLE FAMILY	60.21	---	80	1.3	1.15	15.46
2A	COMMERCIAL	2.58	---	1	---	---	0.89
2B	MULTIFAMILY	6.12	200	1	33	1.75	1.65
3	COMMERCIAL	36.43	---	10	---	---	4.39
4A	COMMERCIAL	4.79	---	3	---	---	0
4B	MULTIFAMILY	23.63	125	1	5.3	1.10	8.32
5A	COMMERCIAL	13.28	---	10	---	---	1.13
5B	COMMERCIAL	10.03	---	8	---	---	0.99
	RIGHT OF WAY	23.93	---	---	---	---	---
	TOTALS	197.18	325	124	---	4.15	44.42

UNIT	REQUIRED PARK/OPEN SPACE
1A	SINGLE FAMILY: 1.0 ACRE / 70 LOTS X 10 LOTS = 0.15 ACRES
1B	SINGLE FAMILY: 1.0 ACRE / 70 LOTS X 80 LOTS = 1.15 ACRES
2B	MULTI FAMILY: 1.0 ACRE / 114 UNITS X 200 UNITS = 1.75 ACRES
4B	MULTI FAMILY: 1.0 ACRE / 114 UNITS X 125 UNITS = 1.10 ACRES

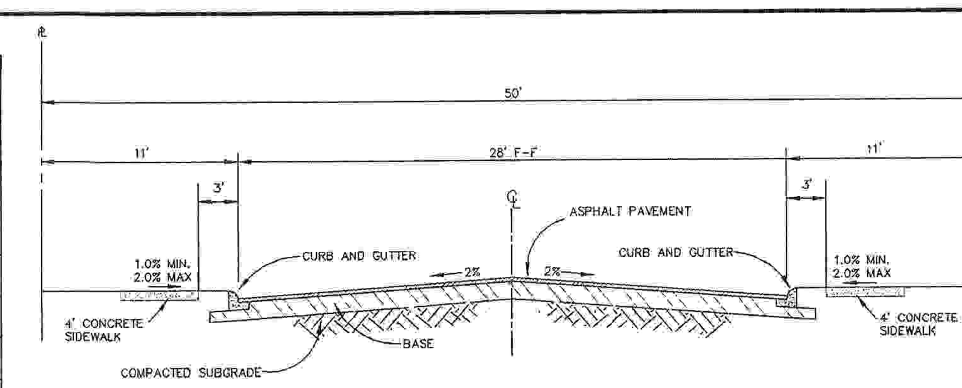

LOCAL TYPE "A" CROSS SECTION (50' R.O.W.)
NOT TO SCALE

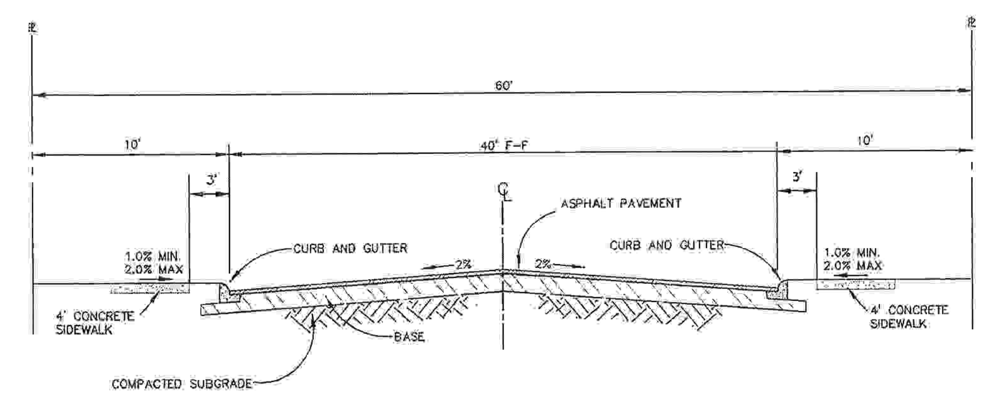

LOCAL TYPE "B" CROSS SECTION (60' R.O.W.)
NOT TO SCALE

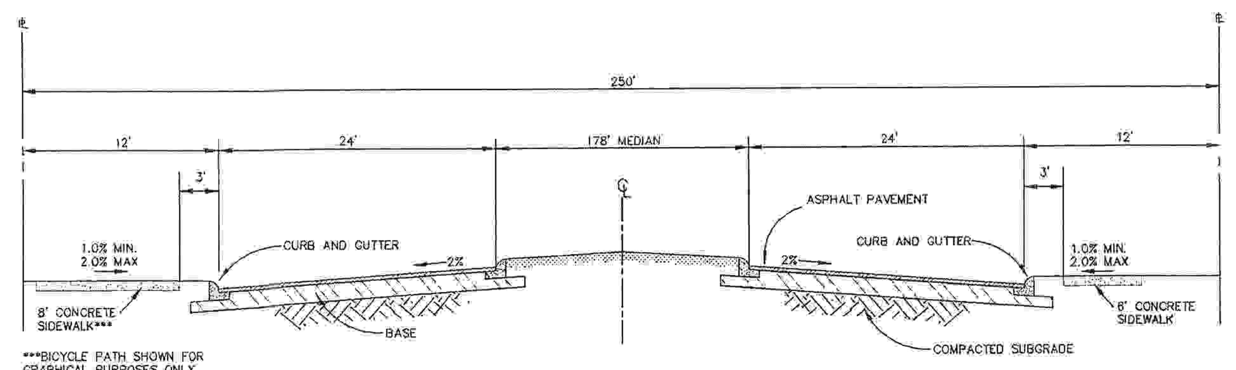

SUPER ARTERIAL CROSS SECTION (250' R.O.W.)
NOT TO SCALE

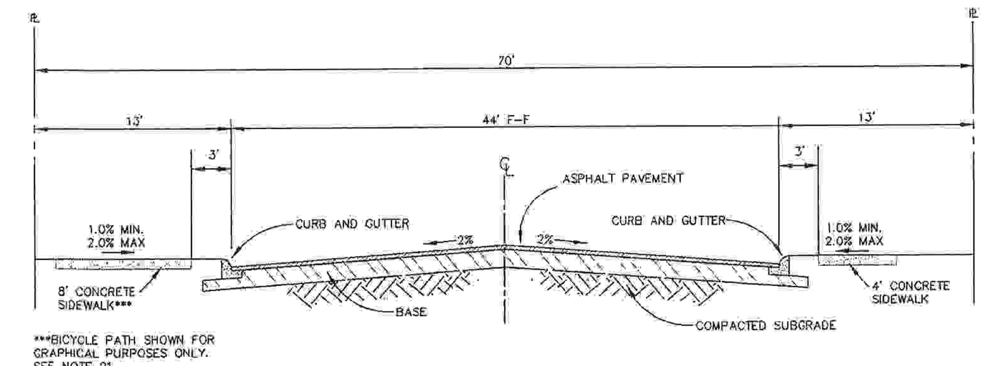

COLLECTOR CROSS SECTION (70' R.O.W.)
NOT TO SCALE

GENERAL NOTES:

1. PROPERTY BOUNDARY IS BASED ON SURVEY PREPARED BY SHERWOOD SURVEYING, LLC, DATED OCTOBER 4, 2010.
2. BASIS OF BEARING IS NAD 83 TEXAS STATE PLAN COORDINATES, SOUTH CENTRAL ZONE.
3. PROPERTY IS LOCATED OUTSIDE SAN ANTONIO CITY LIMITS.
4. ALL INTERSECTIONS SHALL COMPLY WITH CLEAR VISION AREA REQUIREMENTS IN ACCORDANCE WITH UDC SECTION 35-506(d)(5).
5. PROPOSED 100-YR, ULTIMATE CONDITIONS FLOOD PLAIN LIMITS BASED ON KIMLEY-HORN STUDY DATED APRIL, 2011.
6. ALL BICYCLE FACILITIES WILL BE DESIGNED AND CONSTRUCTED IN COMPLIANCE WITH THE TEXAS MUTCD AND AASHTO GUIDELINES FOR BICYCLE FACILITIES, INCLUDING CROSSWALK AND SIGNAGE REQUIREMENTS.
7. SIDEWALKS WILL BE INSTALLED IN THE PUBLIC RIGHT-OF-WAY PER U.D.C. ARTICLE 5, DIVISION 2, 35-506(q).
8. PROPERTY IS NOT WITHIN THE EDWARDS AQUIFER RECHARGE ZONE.
9. DETENTION PONDS WILL BE DESIGNED AT THE TIME OF PLATTING, WHERE REQUIRED. PROPOSED DETENTION PONDS WILL BE SHOWN ON THE FUTURE PLAT/PLATS.
10. WATER SERVICE TO BE PROVIDED BY THE SAN ANTONIO WATER SYSTEM (SAWS).
11. SANITARY SEWER SERVICE TO BE PROVIDED BY THE SAN ANTONIO WATER SYSTEM (SAWS) OR ON-SITE SEPTIC FACILITIES.
12. GAS AND ELECTRIC SERVICES TO BE PROVIDED BY CPS ENERGY.
13. TELEPHONE AND CABLE T.V. SERVICE TO BE PROVIDED BY AT&T OR TIME WARNER.
14. THE PHASING OF THE DEVELOPMENT IS IN SEQUENTIAL ORDER AS NOTED IN THE LAND USE TABLE ON THIS PLAN.
15. SINGLE-FAMILY RESIDENTIAL UNITS WILL COMPLY WITH SECTION 35-503 OF THE CITY OF SAN ANTONIO UDC REGARDING PARK/OPEN SPACE REQUIREMENTS AT THE TIME OF PLATTING.
16. THE REQUIRED SIZE OF THE PARK/OPEN SPACE DEDICATION FOR EACH UNIT IS SHOWN ON THE LAND USE TABLE. THE FINAL LOCATION AND DIMENSIONS OF PARKS/OPEN SPACE FOR EACH UNIT WILL BE DETERMINED AT THE TIME OF PLATTING.
17. REFERENCE TRAFFIC IMPACT ANALYSIS TITLED CIUDAD DE LAS PALOMAS DATED APRIL 2011.
18. REFERENCE STORM WATER MANAGEMENT PLAN AND FLOOD STUDY TITLED CIUDAD DE LAS PALOMAS DATED APRIL 2011.
19. FINAL ROADWAY CROSS SECTIONS WILL BE DETERMINED AFTER GEOTECHNICAL REPORT IS PREPARED FOR PAVEMENT DESIGN.
20. DRIVEWAY LOCATIONS #8-#12 ALONG PROPOSED SH 211 ARE TO BE APPROVED BY TXDOT AND ARE NOT DETERMINED BY THIS PLAN.
21. DRIVEWAY LOCATIONS ALONG PROPOSED OR EXISTING COUNTY MAINTAINED ROADS ARE TO BE DETERMINED AT THE TIME OF PERMITTING AND ARE NOT DETERMINED BY THIS PLAN.
22. BICYCLE PATH ON COLLECTOR AND ARTERIAL ROAD CROSS SECTIONS SHOWN FOR GRAPHICAL PURPOSES ONLY. ACTUAL LOCATION/SIDE OF ROAD TO BE DECIDED AT THE TIME OF PLATTING.
23. PER THE STORMWATER MANAGEMENT PLAN PREPARED BY KIMLEY-HORN AND ASSOCIATES, INC., DATED APRIL 2011, IT WAS DETERMINED THE 5-YR STORM OVERTOPS TALLEY RD. THIS ISSUE WILL BE ALLEVIATED AT THE TIME OF PLATTING UNIT 1A AND WILL FOLLOW THE GUIDELINES SET FORTH IN THE CITY OF SAN ANTONIO UNIFIED DEVELOPMENT CODE, SECTION 35-504(g)(8).

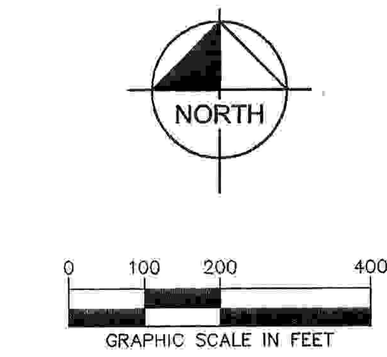

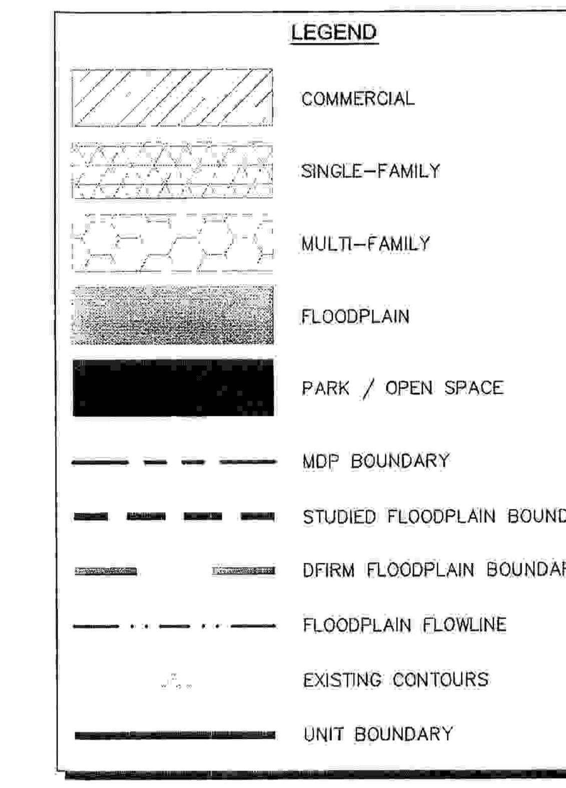

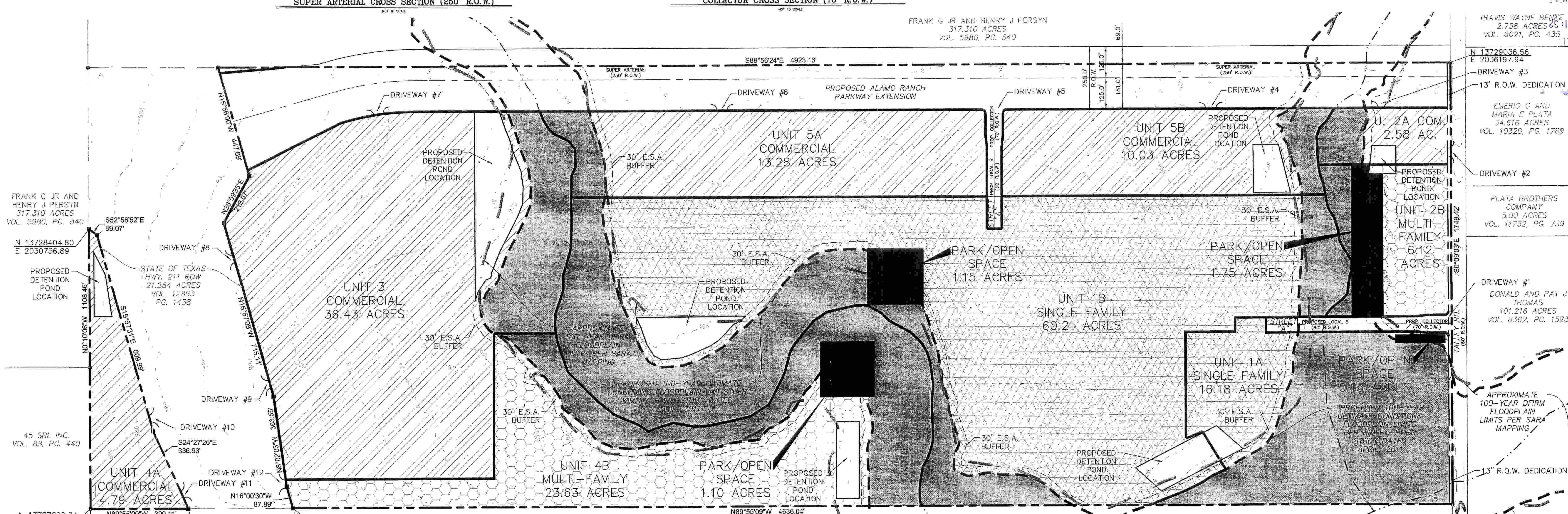

S&P LAND HOLDINGS LLC
24.06 ACRES
VOL. 12472, PG. 326

MEDINA COUNTY
BEXAR COUNTY

STATE OF TEXAS
HWY. 211 ROW
16.787 ACRES
VOL. 8716
PG. 1849

S&P LAND HOLDINGS LLC
180.89 ACRES
VOL. 12472, PG. 326

PLAN HAS BEEN ACCEPTED BY
COSA JPJ
3/1/2013 (Date) 007-11 (Number)
Note: this plan will have to comply with Section 35-412 Scope of approval for validation or plan will expire on
2/28/2013
Date

THE FLOODPLAIN LIMITS ON THIS MASTER DEVELOPMENT PLAN AND/OR PLANNED UNIT DEVELOPMENT ARE ESTIMATED AND SUBJECT TO CHANGE. APPROVAL OF SUBDIVISION PLATS ASSOCIATED WITH THIS MASTER DEVELOPMENT PLAN AND/OR PLANNED UNIT DEVELOPMENT IS SUBJECT TO THE REVIEW AND APPROVAL OF A STORM WATER MANAGEMENT PLAN IN ACCORDANCE WITH APPENDIX B, SECTION 35-B119 OF THE CITY OF SAN ANTONIO UNIFIED DEVELOPMENT CODE. IN ADDITION, AS STATED ABOVE IN NOTE #22, THE OWNER ACKNOWLEDGES THAT PER THE STORMWATER MANAGEMENT PLAN PREPARED BY KIMLEY-HORN AND ASSOCIATES, INC., DATED APRIL 2011, IT WAS DETERMINED THE 5-YR STORM OVERTOPS TALLEY RD. THIS ISSUE WILL BE ALLEVIATED AT THE TIME OF PLATTING UNIT 1A AND WILL FOLLOW THE GUIDELINES SET FORTH IN THE CITY OF SAN ANTONIO UNIFIED DEVELOPMENT CODE, SECTION 35-504(g)(8).

OWNER

ENGINEER

MASTER DEVELOPMENT PLAN ID NO. 007-11

CIUDAD DE LAS PALOMAS

MASTER DEVELOPMENT PLAN

197.177 ACRES
VOLUME 11748, PAGE 908

BEING A 192.386 ACRE TRACT OF LAND SITUATED IN THE JOSE JACINTO GONZALES SURVEY NO. 225, ABSTRACT 269 AND THE BERIANA SANDOVAL SURVEY NO. 40, ABSTRACT 1298, AND A 4.791 ACRE TRACT OF LAND SITUATED IN THE BERIANA SANDOVAL SURVEY NO. 40, ABSTRACT 1298.

CITY OF SAN ANTONIO, ETJ
BEXAR COUNTY, TEXAS
FEBRUARY, 2013

No.	REVISIONS	DATE	BY

Kimley-Horn and Associates, Inc.
601 NW LOOP 410, SUITE 350
SAN ANTONIO, TEXAS 78216
PHONE: 210-541-9166 FAX: 210-541-8699
WWW.KIMLEY-HORN.COM
TBPE FIRM #928

©2013 KIMLEY-HORN AND ASSOCIATES, INC.

RECEIVED
13 FEB 12 PM 1:32
LAND DEVELOPMENT SERVICES

SCALE	DESIGNED BY	DRAWN BY	CHECKED BY
1" = 200'			

CIUDAD DE LAS PALOMAS
197.177 ACRE TRACT
MASTER DEVELOPMENT PLAN
MDP # 007-11

DATE
2/11/13
PROJECT
068681200
SHEET NUMBER
1

This document, together with the concepts and designs presented herein, as an instrument of service, is intended only for the specific purpose and client for which it was prepared. Reuse of and improper reliance on this document without written authorization and adaptation by Kimley-Horn and Associates, Inc. shall be without liability to Kimley-Horn and Associates, Inc.

Drawing: K:\SNA_Civil\068681200\CAD\PlanSheets\C-MDP.dwg MDP Feb 11, 2013 10:00am
Sheetset: Plotted By: nick.holscher

File #: _____

City of San Antonio

DEVELOPMENT SERVICES RECEIVED 2011 APR 29 PM 4:13

Planning & Development Services

Master Plan Review

APPLICATION

In addition to this form, a complete application packet for all plans (excluding proposals to amend an already accepted plan) must include: a Completeness Review Form, 20-folded plan copies with Request for Review Form attached to each copy, a digital file, an 8 ½ by 11 inch reduced copy, 2-Storm Water Management Plans, 4-Traffic Impact Analyses, MDP/PUD review fee, TIA review fee, and a Park review fee. **Incomplete proposals will not be considered for review.**

Master Plan Application Type (check one):

- ■ Master Development Plan (MDP)
- ☐ Master Development Plan Amendment
  - ☐ Major ☐ Minor
- ☐ MDP/ P.U.D. Plan (combination)
- ☐ Flexible Development Plan (FDP)
  - ☐ Urban Development (UD) ☐ Farm and Ranch (FR)
  - ☐ Rural Development (RD) ☐ Mixed Light Industrial (MI-1)
  - ☐ Mixed Heavy Industrial (MI-2)
- ☐ Form Based Zone District (FBZD)
- ☐ Planned Unit Development (PUD)
- ☐ Planned Unit Development Amendment
  - ☐ Major ☐ Minor
- ☐ Mixed Use District (MXD)
- ☐ Traditional Neighborhood Development (TND)
- ☐ Master Planned Community District (MPCD)
- ☐ Military Airport Overlay Zone (MAOZ)
- ☐ Manufactured Home Park Plan (MHPP)
- ☐ Alternative Pedestrian Plan (APP)

Applicant Contact Information:

Project Name: Ciudad De Las Palomas

Owner/Agent: JD Properties – Jim Daniell E-mail: jdaniell@satx.rr.com

Address: 5150 Broadway, Ste. 288, San Antonio, TX Zip code: 78209 Phone: (210) 824-7828

Contact Person Name: Brian Parker, P.E. E-mail: brian.parker@kimley-horn.com

Company: Kimley-Horn and Associates, Inc. Relationship to Owner: Civil Engineer

Address: 45 NE Loop 410, Ste. 890, San Antonio, TX Zip code: 78216 Phone: (210) 541-9166

Plan Proposal:

Total number of lots: 120 Total acreage: 197.177

Existing zoning: OCL Proposed zoning: OCL

Density (dwelling units per acre): Varies per Unit Typical residential lot size: ½ acre min.

Number of dwelling units per phase:

Phase: 1	Dwelling units: 89	Phase: 4	Dwelling units: 505
Phase: 2	Dwelling units: 175	Phase: 5	Dwelling units: 0
Phase: 3	Dwelling units: 0	Phase:	Dwelling units:

Complete this subsection for PUD Plans only:

☐ Private street(s), linear feet of street: _____ ☐ Public street(s), linear feet of street: _____

Total open space: _____ Percent open space (total open space divided by total acreage): _____ %

☐ Gated ☐ Un-Gated If gated, type of gate (guard/mag card/key/transmitter/etc.): _____

Construction start date: _____

X/Y coordinates at major street entrance(s): X: _____ Y: _____

For City Use Only

Intake Date: _____ ***Intake By:*** _____

City of San Antonio
Planning & Development Services
Master Plan Review Application

File #: _____

2011 APR 29 PM 4: 13

Site Description:

Jurisdiction: ☐ San Antonio City Limits ■ San Antonio ETJ ☐ Outside ETJ

City Council District: N/A

School District: Medina Valley ISD

Ferguson map grid: 576 B4-C4

USGS Grid: 14R NT 20517 62284

Existing land use(s): Vacant Farm Land

Description of plan boundaries:
Bounded to the east by Talley Rd., Bounded to the west by the Bexar County / Medina County line, Bounded to the north by an undeveloped 317 acre property, and Bounded to the south by an undeveloped 180 acre property.

Existing legal description:
Tract 1-Being a 192.386 acre tract of land situated in the Jose Jacinto Gonzales survey No. 225, abstract 269 and the Beriana Sandoval survey No. 40, abstract 1298, and being out of that certain 218.506 acre tract of land conveyed to Ciudad De Las Palomas, LTD.; described in Vol. 11745, Pg. 908, official records of Bexar County. Tract 2-Being a 4.791 acre tract of land situated in the Beriana Sandoval Survey No. 40, abstract 1298, and out of that certain 218.506 acre tract of land conveyed to Ciudad De Las Palomas, LTD.; described in Vol. 11745, Pg. 908, official records of Bexar County, Texas.

Property Features:

Edwards Aquifer Recharge Zone (check all that apply): ☐ Contributing ☐ Recharge ■ Transition ☐ Artesian

Watershed(s): Medio Creek

Generalized slope of site: 2-4%

Valuable natural features (e.g. heritage trees, endangered species habitat, karsts features, etc) on or adjoining site:
Mature heritage trees are present on-site.

Significant historic resources (e.g. homestead, mill, archeological site) on or adjoining site:
N/A

Related applications:

Is there a previous MDP (*formerly POADP*) for this site? ☐ YES ■ NO
Name: _____ File #: _____ Date accepted: _____

Is there a corresponding PUD for this site? ☐ YES ■ NO
Name: _____ File #: _____ Date approved: _____

Are there any Rights Determinations associated with this site? ☐ YES ■ NO
Name: _____ File #: _____ Date approved: _____

Is there another name for this project or another name commonly used to describe this site?
Name: N/A

List all associated Plats for this site whether approved or pending approval?
Name: N/A Plat #: _____
Name: N/A Plat #: _____
Name: N/A Plat #: _____
Name: N/A Plat #: _____
Name: N/A Plat #: _____

Is this project in conjunction with a Tax Increment Reinvestment Zone (TIRZ) Application? ☐ YES ■ NO

Is this project within the boundaries of the City South Management Authority (CSMA)? ☐ YES ■ NO

If YES please note that unique development standards have been adopted for projects in TIRZ zones and the CSMA area. For

City of San Antonio
Planning & Development Services
Master Plan Review Application

File #: _____

DEVELOPMENT SERVICES
RECEIVED
2011 APR 29 PM 4:13

complete information and application of the Tax Increment Financing (TIF) and Reinvestment Zone Guidelines and Criteria, please call the Housing and Neighborhood Services Department at (210) 207-7881. For CSMA requirements call (210) 207-7028.

Owner or Authorized Representative:

I, the undersigned, hereby certify that this application and all sketches and data and matter attached to and made a part of said application are honest and true to the best of my knowledge and belief. Further, I understand my continuing obligation to notify the Planning & Development Services Director in writing of the inaccuracy of any statement or representation which was incorrect when made or which becomes incorrect by virtue of changed circumstances. Finally, I understand that by signing this application that I am giving the City or agent thereof the authority to duplicate, disseminate and reproduce any and all items submitted as part of this request, whether copyrighted or not.

Print Name: Jim Daniell Signature: Jim Daniell

Date: 4/25/11 Phone: (210) 824-7828 Fax: (210) 824-2249

E-mail: jdaniell@satx.rr.com

If you have any questions, please contact any of the following Master Development Plan team members:

Melissa Ramirez Senior Management Analyst (210) 207-7038 Melissa.Ramirez@sanantonio.gov	Elizabeth Carol Senior Management Analyst (210) 207-7893 Elizabeth.Carol@sanantonio.gov
Richard Carrizales Planner (210) 207-8050 Richard.Carrizales@sanantonio.gov	Larry Odis Planner (210) 207-0210 Larry.Odis@sanantonio.gov
Robert Lombrano Planner (210) 207-5014 Robert.Lombrano@sanantonio.gov	Luz Gonzales Planner (210)207-7898 Luz.Gonzales@sanantonio.gov
	Donna Schueling Planner (210) 207-5016 Donna.Schueling@sanantonio.gov

City of San Antonio
Planning & Development Services
Master Plan Review Application

2011 APR 29 PM 4: 13

APPENDIX A: APPLICATION CHECKLIST

Submittal Requirements:

The following are required for FDP, MDP, MXD, MPCD, PUD and TND applications (UDC §35-207, -310.15,-345, -B101, -B109, -B113):

GENERAL:

- ■ Name of the Master Development Plan or PUD and the subdivision;
- ■ City assigned Plan ID number; 007-11
- ■ Name and address of owner of record, developer and engineer;
- ■ The name(s) of all adjacent property owner(s) as shown on current tax records; owner for property to West of 4th (To the South)
- ☐ Certificate of agency or power of attorney if other than owner;
- ☐ Signature blocks for the chairperson and secretary (Development Services Director or assignee).
- ■ Tree stand delineation exhibit and review fee; tree affidavit not required (Not required for PUD applications);
- ■ Topographic contour lines no greater than ten (10) feet (PUD applications require two feet intervals);
- ■ Location of property lines, existing easements, cemeteries and/or historic graves, railroad rights-of-way, watercourses; location, width, and names of all existing or platted streets or other public ways within or immediately adjacent to the tract; names of adjacent property owners from the latest certified assessment rolls. Cemeteries and/or historic graves should shown as historic preservation areas or lots. (Not required for PUD applications);

LOCATION:

- ■ Two points identified by Texas Planes Coordinates; Give Two for each section
- ■ Basis of bearings used and a north point;
- ■ Boundary of the development and total acreage encompassed, thereby described and mapped at an appropriate scale;
- ■ Date of preparation;
- ■ Graphic and written scale and north arrow;
- ■ A location map at a scale not less than 1"= 2,000' indicating the location and distance in relation to adjacent streets and all surrounding Major Thoroughfares. The location map is to be located in the top left hand corner of the sheet;
- ■ All existing easements or right-of-way with street names impacting the development area, their nature and width.

TRAFFIC AND CIRCULATION:

- ■ The location and dimensions of all existing streets and access points provided to the site from adjacent roadways. Locations and dimensions of all proposed public and private streets including major thoroughfares, collectors and local B streets within the development's boundaries if over 100 acres. If 100 acres or less, all streets shall be shown;
- ■ The schematic (typical section) of all existing and proposed streets, as well as proposed access points;
- ■ The schematic location of the pedestrian circulation system including walkways and bicycle paths where applicable (sidewalks may meander from the location shown in typical sections to create greater distances from the curb to the sidewalk);
- ■ Traffic Impact Analysis (UDC §35-502).

LOTS, PHASING AND USES:

- ■ The location and dimensions of all proposed or existing lots;
- ■ A development phasing schedule including the sequence for each phase; approximate size in area of each phase; and proposed phasing of construction of public improvements, recreation and common open space areas;
- ■ A delineation of EARZ, wetlands and floodplains;
- ■ The location, dimensions, and area of all parcels of land proposed to be set aside for park or playground use or other public, or for the use of property owners in the proposed subdivision, where applicable;
- ■ The location, acreage, category and type of improvements if any for active and passive open space, including greenbelt and active recreation space areas and private recreational areas;
- ■ A final statement in tabular form which sets forth the following data, when such data is applicable to a given development

2011 APR 29 PM 4:13

plan:

(a) Total number of lots;
(b) Total area of open space;
(c) Total number of dwelling units, by development phase;
(d) Residential density and units per acre;
(e) Total area of property.

☐ Location and size in acres of school sites, as applicable;

■ The exterior boundaries as indicated from deeds or other instruments of the development area giving lengths and bearings of the boundary lines. If the proposed development is bounded by a watercourse, a closing meander traverse of that boundary shall be made and shown on the site plan. Where curving boundaries are used, sufficient data to establish the boundary on the ground shall be given; including the curve's radius, central angle and arc length.

■ The location and general nature of proposed uses and proposed intensity (residential density or non-residential floor area ratio) (Not required for PUD applications);

STORM WATER MANAGEMENT:

■ Storm water management plan (UDC §35-B119).

The following additional items are required for PUD Plan and FDP applications only(UDC §35-310.15, -B101, -B113) :

☐ Existing topography with maximum contour intervals of two (2) feet, except where existing ground is on a slope of less than five percent (5%) then either one foot contours or spot elevation shall be provided where necessary;

☐ Proposed covenants on the property, if any, including a map and legal description of area affected;

☐ Proposed land uses and zoning classifications by location, type, density and size to include residential density and non-residential floor area ratio (FAR);

☐ Notation of any restrictions required by the City Council in accordance with the PUD ordinance;

☐ Tabulation showing the following:

(a) Total acreage;
(b) Total number of lots;
(c) Square footage of all buildings and structures;
(d) The approximate location and area of impervious cover of non-residential uses, multi-family dwellings, and any portion of a site located within the EARZ;
(e) Square footage of all paved or otherwise hard surfaced streets, parking facilities, including curb and gutters, walks, loading areas, and asphalt or concrete aprons for solid waster containers, signs or outdoor mechanical equipment;
(f) Total floor area ratio (FAR) for each type of non-residential use;
(g) Total area of passive open space;
(h) Total area of active developed recreational open space;
(i) Total number of off-street parking and loading spaces.

☐ The approximate location and area of impervious cover of non-residential uses, multi-family dwellings, and any portion of a site located within the EARZ;

☐ Location and dimensions of public and/or private streets, parking areas, access control stations, and clear vision areas;

☐ Identification of common open space areas and/or the percentage of each lot which is to be reserved as open space, plus the calculations used to determine the required percentages;

☐ Staging plan if PUD is to be developed in more than one phase;

☐ Utilities plan;

☐ Lots numbered as approved by the City;

☐ Perimeter setbacks as required;

☐ Major physical features such as easements, streams, floodplains and significant stands of trees as indicated in the most recent city-maintained aerials;

☐ Delineation of woodlands;

City of San Antonio
Planning & Development Services
Master Plan Review Application

2011 APR 29 PM 4:13

- ☐ List of names and addresses of all owners of all property lying within 200 feet of the boundaries of the PUD, and a map showing the PUD site and all properties within a 200 foot radius. Fee in lieu of may be provided in accordance with Appendix C;
- ☐ Identification of all common elements/amenities to be built out in the future including but not limited to tennis courts, pools, pavilions, walking trails, etc.;
- ☐ Provisions for maintenance funding.

MDP, FDP and PUD Plan Applications using the Conservation Subdivision Use Pattern also require (UDC §35-B101):

- ☐ Delineation of woodlands;
- ☐ A slope analysis of the proposed development site, showing slopes for the following percent of existing grades: 0-10%, 11%-20%, 21-30%, 31-40%, and slopes exceeding 40%, including a tabulation of the number of acres in each slope percentage;
- ☐ Historic, archaelogical or cultural resources to be credited as conservation areas.

Applications for MPCD also require (UDC §35-345):

- ☐ Site plan to include proposed land uses by location, type (single-family, multi-family, office or commercial), density and size. Where single-family uses are designated, minimum lot size shall be included and major physical features such as easements, streams, flood plains, and significant vegetation shall be noted.

Applications for FDP also require a site plan that shows the following information (UDC §35-310.15):

- ☐ Land Use: location, acreage, notation of restrictions based on use-type;
- ☐ Circulation: Street type and location must be indicated. Rights of way and pavement cross sections must be provided that indicate travel lane width, bike lane, and on-street parking within pavement width, and vegetation and sidewalk widths within remaining rights of way. Parking location and pedestrian walkways to commercial buildings must be indicated;
- ☐ Block lengths must be indicated on plan;
- ☐ Vegetative buffers and building setbacks shall be indicated or annotated on the plan.

Applications for Pedestrian Plan require (UDC §35-506):

- ☐ Location and arrangement of all-weather walkways;
- ☐ Phasing or time schedule for the construction of walkways.

Applications for MAOZ require (UDC §35-334, -B110):

- ☐ Site size, locational information, and adjacent land uses;
- ☐ Dimensioned layout, with the location, size, and height of all buildings and structures;
- ☐ Floor area ratio of each lot;
- ☐ The location and size of all above and below ground storage containers for flammable and combustible materials;
- ☐ Size and location of all vehicular access points, streets, and parking areas;
- ☐ Major physical features such as creeks, topography, and easements;
- ☐ Diagrams indicating the location, dimensions, and angles of any or other reflective surfaces proposed in the development design;
- ☐ Staging plan if appropriate.

Applications for MHPP required (UDC §35-B108):

- ☐ A plan and typical section of streets, sidewalks, crosswalks, slabs, patios, if any, and details on sewer and water sections;

City of San Antonio
Planning & Development Services
Master Plan Review Application

2011 APR 29 PM 4: 13

- ☐ The name of the developer;
- ☐ The name of the record owner of the land involved;
- ☐ The legal description of the land being developed, with an identification number assigned to each manufactured home site;
- ☐ The tract boundary lines;
- ☐ The scale; north arrow and date;
- ☐ The final contour data to show drainage of the site of the proposed manufactured home park. If the average grade of the site is five (5) percent or less, the maximum contour interval shall be two (2) feet. If the average grade of the site is greater than five (5) percent, the contour interval may be increased to five (5) feet;
- ☐ The source of water supply and layout of the water system, including locations of standard fire hydrants;
- ☐ The method of sewage disposal and the layout of the sewer system;
- ☐ The name of the manufactured home park and the legal description of property;
- ☐ The location and dimensions or all streets, easements, and other rights-of-way
- ☐ Typical space dimensions and the locations of park facilities shall be shown;
- ☐ The front building setback lines on all manufactured home stands and other sites and side yard setback lines at street intersections and cross-walkways;
- ☐ A location diagram.

■ Habitat Compliance Form (signed original) & Aerial photo – both items will require an original to be submitted & digital file (PDF) do not email.

File #: _____

DEVELOPMENT SERVICES
RECEIVED
2011 APR 29 PM

City of San Antonio
Planning & Development Services

Master Development Plan Completeness Review

Project Name: Ciudad De Las Palomas
Project Engineers/Surveyors or Firm Name: Kimley-Horn and Associates, Inc.
Address: 45 N.E. Loop 410, Suite 890, San Antonio, Texas 78216
Contact Person Name: Brian Parker
Phone: 210.541.9166 **Fax:** 210.541.8699 **E-mail:** brian.parker@kimley-horn.com

Master Plan Application Type (check one):

- ■ Master Development Plan (MDP)
- ☐ Master Development Plan Amendment
  - ☐ Major ☐ Minor
- ☐ MDP/ P.U.D. Plan (combination)
- ☐ Flexible Development Plan (FDP)
  - ☐ Urban Development (UD) ☐ Farm and Ranch (FR)
  - ☐ Rural Development (RD) ☐ Mixed Light Industrial (MI-1)
  - ☐ Mixed Heavy Industrial (MI-2)
- ☐ Form Based Zone District (FBZD)
- ☐ Planned Unit Development (PUD)
- ☐ Planned Unit Development Amendment
  - ☐ Major ☐ Minor
- ☐ Mixed Use District (MXD)
- ☐ Traditional Neighborhood Development (TND)
- ☐ Master Planned Community District (MPCD)
- ☐ Military Airport Overlay Zone (MAOZ)
- ☐ Manufactured Home Park Plan (MHPP)
- ☐ Alternative Pedestrian Plan (APP)

To be accepted for review a Plan shall comply with the provisions of the Unified Development Code.

Required Items for Completeness Review

Items Submitted	Staff Inventory	
☑	☐	Completed and signed Application Form
☑	☐	Plan Review Fee
☑	☐	Digital information in xxx.DWG or xxx.DXF
☑	☐	8 1/2 "x 11" Reduced Copy
☑	☐	Storm Water Management Plan **(2 copies)**
☑	☐	Traffic Impact Analysis (TIA) **(4 copies)** – FEE Received ☑ Indicate type: ☐ Worksheet ☐ Level 1 ☐ Level 2 ☑ Level 3
☑	☐	Parks Review Fee
☑	☐	Habitat Compliance Form (signed original) & Aerial photo – both items will require an original to be submitted & digital file (PDF), do not email.
☑	☐	20 copies (folded) with Land Entitlements Office, MDP Division Request for Review form (attached) for respective departments or agencies. If project is an MDP/PUD combination, two sets of everything is required. ☐ Master Development Plan/ Major Thoroughfare ☐ Storm Water Engineering ☐ Historic ☐ Traffic & Streets ☐ Disability Access (Sidewalks) ☐ Trees Preservation ☐ Zoning ☐ Parks ☐ SAWS Aquifer ☐ Bicycle Mobility ☐ Bexar County Public Works ☐ Other:

For Staff Use Only

☐ Complete ☐ Incomplete

Completeness Review By: _____ Date: _____

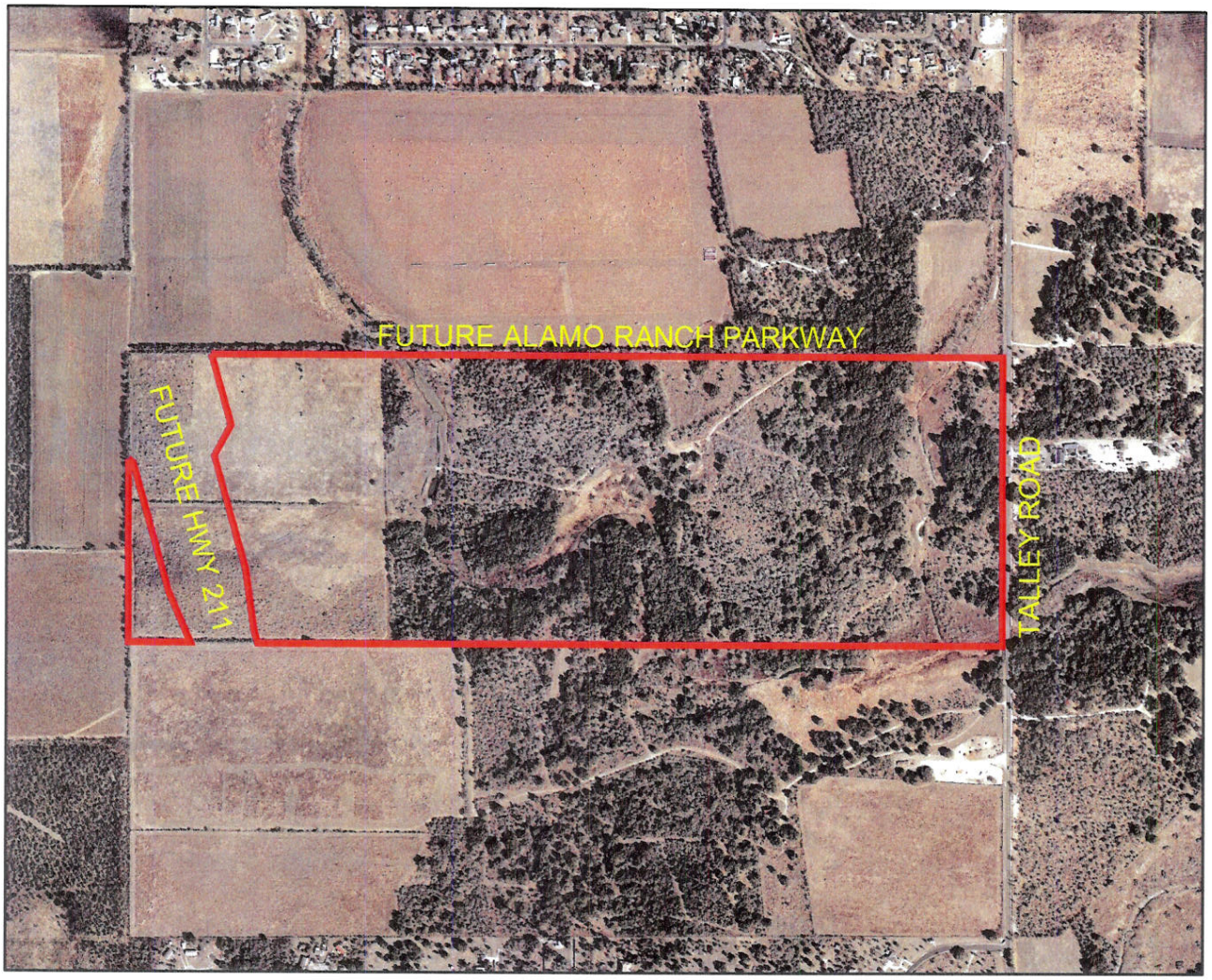

AERIAL EXHIBIT

(N.T.S)