LOCATION MAP

N.T.S.

LEGAL DESCRIPTION

A 691.094 ACRE TRACT OF LAND BEING ALL OF A 691.094 ACRE TRACT OF LAND CONVEYED TO CTMGT RANCHO DEL LAGO, LLC OF RECORD IN 15880 PAGE 1694 OF THE OFFICIAL PUBLIC RECORDS OF BEXAR COUNTY, TEXAS AND BEING OUT OF THE JOHANN PFEIFFER SURVEY NO. 7, ABSTRACT 1018, COUNTY BLOCK 4349, MANUEL LEAL SURVEY NO. 298, ABSTRACT 444, COUNTY BLOCK 4340, C. CHAVARIA SURVEY NO. 248, ABSTRACT NO. 4354, COUNTY BLOCK 4339 AND J. VASQUEZ SURVEY NO. 200 1/8, ABSTRACT 1075, COUNTY BLOCK 4354 OF BEXAR COUNTY, TEXAS.

FLOOD PLAIN NOTE:

THE FLOODPLAIN LIMITS ON THIS MASTER DEVELOPMENT PLAN ARE ESTIMATED AND SUBJECT TO CHANGE. APPROVAL OF SUBDIVISION PLATS ASSOCIATED WITH THIS MASTER DEVELOPMENT PLAN IS SUBJECT TO REVIEW AND APPROVAL OF A STORM WATER MANAGEMENT PLAN IN ACCORDANCE WITH APPENDIX B, SECTION 35-B119 OF THE CITY OF SAN ANTONIO UNIFIED DEVELOPMENT CODE.

KFW ENGINEERS CTMGT RANCHO DEL LAGO, LLC

LEGEND

= MDP BOUNDARY

= PHASING LIMITS

= CONTOURS

= OPEN SPACE

NOTES:

1. BEARINGS ARE BASED ON THE STATE PLANE COORDINATE SYSTEM ESTABLISHED FOR THE TEXAS SOUTH CENTRAL ZONE 4204, NORTH AMERICAN DATUM (NAD) OF 1983.
2. ALL INTERNAL STREETS WITHIN THE M.D.P. LIMITS ARE LOCAL TYPE "A" WITH A 50' R.O.W., 28' PAVEMENT, AND 2 - 11' PARKWAYS UNLESS OTHERWISE NOTED.
3. THIS PROPERTY IS NOT WITHIN THE EDWARDS AQUIFER RECHARGE ZONE.
4. THE FRONT, SIDE, AND REAR SETBACKS WILL CONFORM TO THE MINIMUM SETBACKS REQUIRED BY THE UNIFIED DEVELOPMENT CODE ZONING REQUIREMENTS.
5. SEWER SERVICE TO BE PROVIDED BY S.A.W.S., ELECTRIC SERVICE TO BE PROVIDED BY CITY PUBLIC SERVICE & WATER SERVICE TO BE PROVIDED BY S.A.W.S..
6. A VARIABLE SIGHT CLEARANCE EASEMENT WILL BE REQUIRED AT CORNER LOTS IF THE INTERSECTION DOES NOT MEET SIGHT DISTANCE REQUIREMENTS AS DEFINED IN LATEST EDITION OF AASHTO MANUAL.
7. BEARINGS ARE BASED ON THE STATE PLANE COORDINATE SYSTEM ESTABLISHED FOR THE TEXAS SOUTH CENTRAL ZONE, NORTH AMERICAN DATUM (N.A.D.) OF 1983.
8. THE FLOOD PLAIN LIMITS ON THIS MASTER PLAN ARE ESTIMATED AND SUBJECT TO CHANGE. APPROVAL OF SUBDIVISION PLATS ASSOCIATED WITH THIS MASTER DEVELOPMENT PLAN ARE SUBJECT TO THE REVIEW AND APPROVAL OF A STORM WATER MANAGEMENT PLAN IN ACCORDANCE WITH THE APPENDIX B, SECTION 35-B119 OF THE CITY OF SAN ANTONIO UNIFIED DEVELOPMENT CODE.
9. SIDEWALKS WILL BE INSTALLED IN THE PUBLIC RIGHT-OF-WAY PER UDC ARTICLE 5, DIVISION 2: 35-506 (q). THE MINIMUM WIDTH OF SIDEWALKS ADJOINING A PLANTING STRIP SHALL BE FOUR (4) FEET IN WIDTH. THE MINIMUM WIDTHS OF SIDEWALKS ADJOING THE CURB SHALL BE SIX (6) FEET IN WIDTH FOR COLLECTORS (MINIMUM 70 FEET OF RIGHT-OF-WAY WIDTH) AND ARTERIALS (MINIMUM 86 FEET RIGHT-OF-WAY WIDTH) AND FOUR (4) FEET FOR RESIDENTIAL (MINIMUM 50 FEET RIGHT-OF-WAY WIDTH).
10. ALONG 140' COLLECTOR ROAD A TEN (10) FOOT MINIMUM WIDTH MULTI USE PATH WILL MEANDER WITHIN THE PARKWAY. ACTUAL LOCATION OF MULTI USE PATH WILL BE DETERMINED AT CONSTRUCTION.

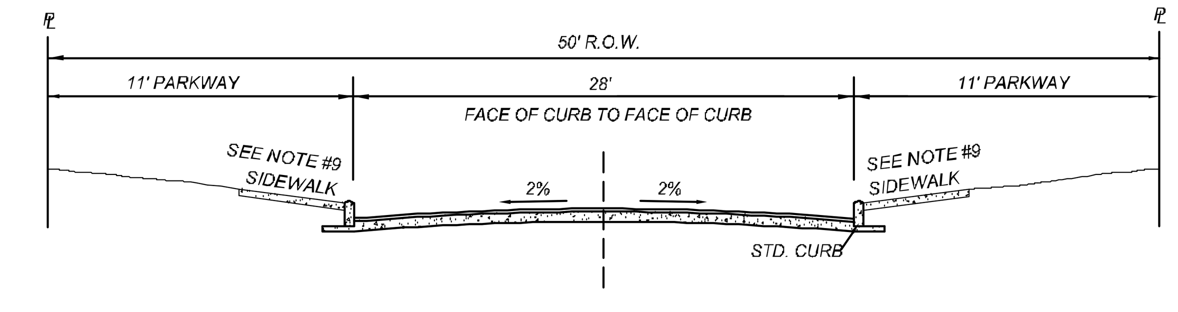

50' R.O.W. STREET SECTION - LOCAL "A"

NOT TO SCALE

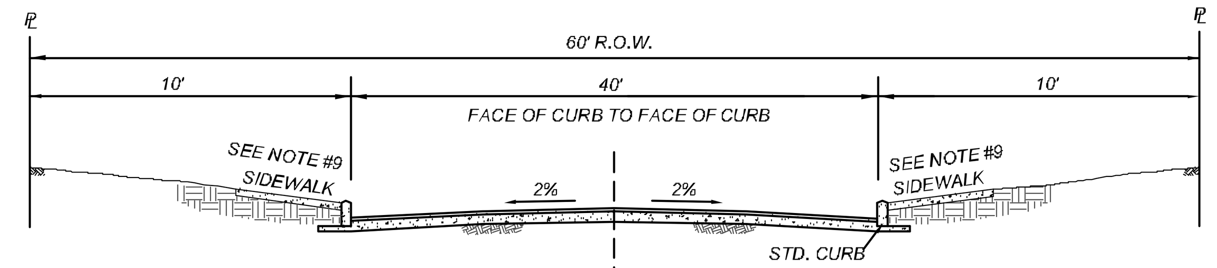

60' R.O.W. STREET SECTION - LOCAL TYPE "B"

NOT TO SCALE

LAND USE DENSITY TABLE						
PHASE	LAND USE	AREA (ACRES	DWELLING UNITS	PARK/OPEN SPACE* (ACRES)	DENSITY (DWELLING UNITS/ACRES)	UNIT PHASING SEQUENCE
1**	RESIDENTIAL/ SCHOOL SITE	283.44	857	20.92	3.02	
2	RESIDENTIAL	153.22	554	26.05	3.62	
3	RESIDENTIAL	254.43	943	20.75	3.71	
TOTAL		691.09	2354	67.72	3.41	

*PARK SPACE CALCULATION
PARK SPACE REQUIREMENTS: 1 ACRE PER 70 LOTS
CALCULATION: 2354 LOTS / 70 LOTS = 58.85 ACRES

**PHASE 1 IS ANTICIPATED TO CONTAIN A SHOOL SITE. THE EXACT LOCATION AND AREA TO BE ESTABLISHED BY PLAT.

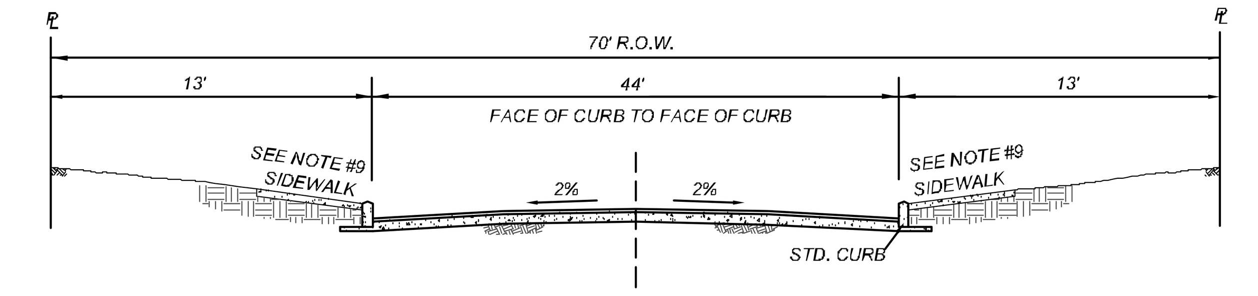

70' R.O.W. STREET SECTION - COLLECTOR (TYP.)

NOT TO SCALE

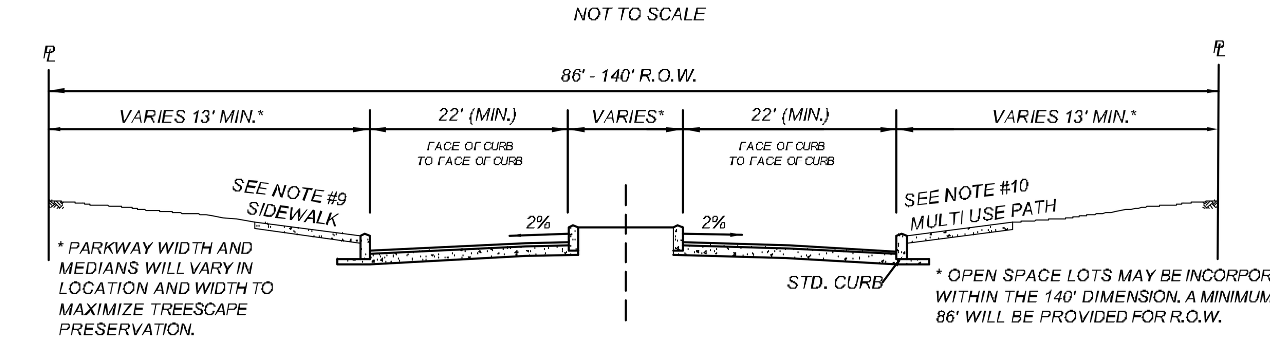

140' R.O.W. STREET SECTION - COLLECTOR

NOT TO SCALE

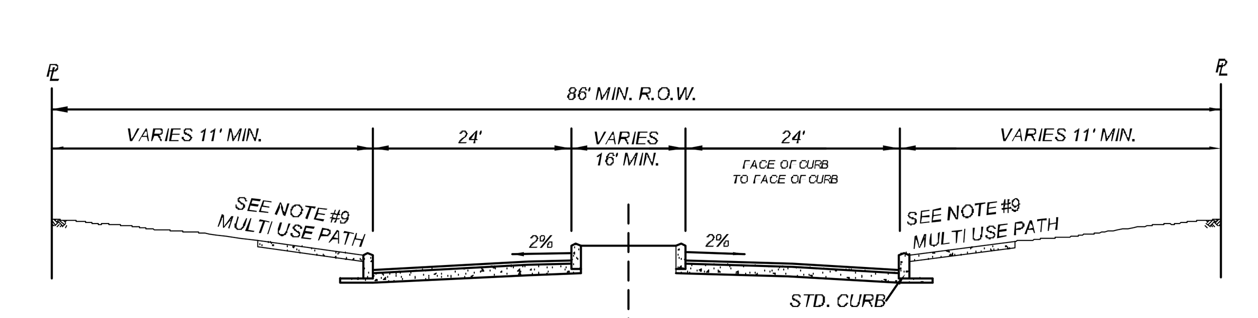

86' R.O.W. STREET SECTION - SECONDARY ARTERIAL

NOT TO SCALE

KFW ENGINEERS & SURVEYING
FIRM# 9513
14603 HUEBNER RD. BLDG. 40
SAN ANTONIO, TEXAS 78230
PHONE (210) 979-8444
FAX (210) 979-8441

ISSUE DATE

REVISIONS

ARCADIA RIDGE SUBDIVISION MASTER DEVELOPMENT PLAN

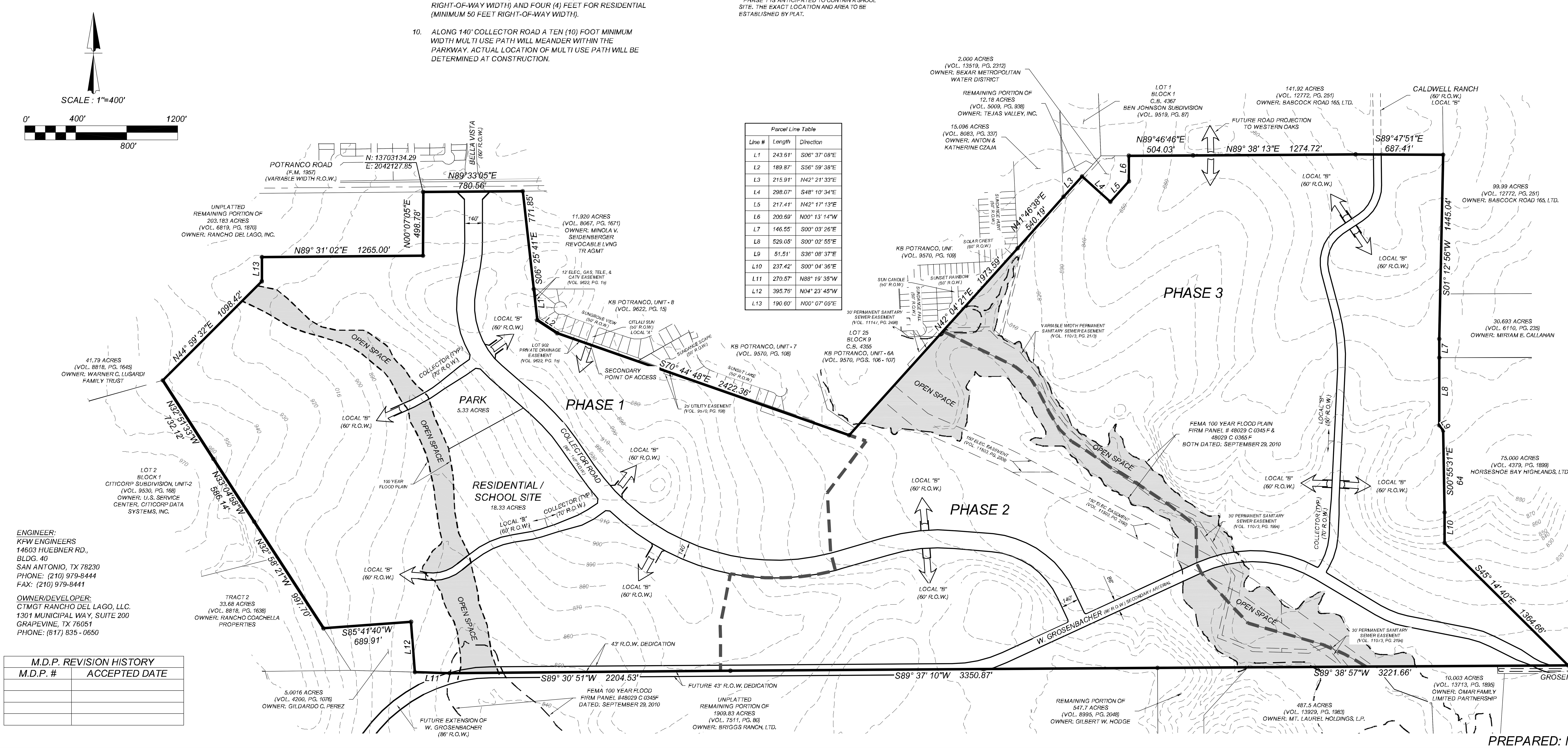

Parcel Line Table		
Line #	Length	Direction
L1	243.61'	S06° 37' 08"E
L2	189.87'	S56° 59' 38"E
L3	215.91'	N42° 21' 33"E
L4	298.07'	S48° 10' 34"E
L5	217.41'	N42° 17' 13"E
L6	200.69'	N00° 13' 14"W
L7	146.55'	S00° 03' 26"E
L8	529.05'	S00° 02' 55"E
L9	51.51'	S36° 08' 37"E
L10	237.42'	S00° 04' 36"E
L11	270.57'	N88° 19' 35"W
L12	395.76'	N04° 23' 45"W
L13	190.60'	N00° 07' 05"E

ENGINEER:
KFW ENGINEERS
14603 HUEBNER RD.,
BLDG. 40
SAN ANTONIO, TX 78230
PHONE: (210) 979-8444
FAX: (210) 979-8441

OWNER/DEVELOPER:
CTMGT RANCHO DEL LAGO, LLC.
1301 MUNICIPAL WAY, SUITE 200
GRAPEVINE, TX 76051
PHONE: (817) 835 - 0650

M.D.P. REVISION HISTORY	
M.D.P. #	ACCEPTED DATE

Date: May 15, 2013, 3:27pm User ID: jadkins
File: P:\251\04\00\Design\Civil\MDP\MDP_2510400.dwg

JOB NO. 251-04-00
DATE: MAY, 2013
DRAWN: JA CHECKED: CL

SHEET NUMBER:

1 OF 1

PREPARED: MAY 2013

THIS DOCUMENT HAS BEEN PRODUCED FROM MATERIAL THAT WAS STORED AND/OR TRANSMITTED ELECTRONICALLY AND MAY HAVE BEEN INADVERTENTLY ALTERED. RELY ONLY ON FINAL HARDCOPY MATERIALS BEARING THE CONSULTANT'S ORIGINAL SIGNATURE AND SEAL.