EF/lj
02/08/2018
11

AN ORDINANCE 2018-02-08-0079

AMENDING CITY CODE CHAPTER 35, UNIFIED DEVELOPMENT CODE OF SAN ANTONIO, TEXAS, BY AMENDING MILITARY LIGHTING OVERLAY DISTRICTS (MLOD), AND DIRECTING THE DEVELOPMENT SERVICES DEPARTMENT TO INITIATE A REZONING OF APPLICABLE PROPERTIES.

* * * * *

WHEREAS, the City Council adopted the Military Lighting Overlay District (MLOD) by Ordinance 2008-12-11-1133 on December in, 2008; and

WHEREAS, the City Council established the Camp Bullis Military Lighting Overlay District (MLOD-1) by Ordinance 2009-04-02-0258 on April 2, 2009 and Ordinance 2009-11-19-0947 on November 19, 2009; and

WHEREAS, the City Council adopted the SA Tomorrow Sustainability Plan which included a charge to study and consider updates to the existing Dark Sky Policy and directed city staff to begin the plan on August 11, 2016; and

WHEREAS, the Planning Commission, Community Health and Equity Committee, and Zoning Commission held duly noticed public hearings at which time parties in interest and citizens were given an opportunity to be heard, considered and made a recommendation of approval on January 10, 2018, January 25, 2018 and February 6, 2018, respectively; **NOW THEREFORE**,

BE IT ORDAINED BY THE CITY COUNCIL OF THE CITY OF SAN ANTONIO:

SECTION 1. Chapter 35 of the City Code of San Antonio, Texas, the Unified Development Code, is hereby amended by adding language that is underlined (added) and deleting the language that is stricken (~~deleted~~) to the existing text as set forth in this Ordinance.

SECTION 2. Chapter 35 of the City Code of San Antonio, Texas, is hereby amended as follows:

Chapter 35, Article III, Section 35-339.04. is amended as follows:

Sec. 35-339.04. - Military Lighting Overlay Districts.

EF/lj
02/08/2018
 # 11
STATEMENT OF PURPOSE

The purpose of this section is to establish regulations for outdoor lighting impacting military operations five (5) miles or less from ~~within~~ ~~of~~ the perimeter of Camp Bullis/Camp Stanley, Randolph Air Force Base, and Lackland Air Force Base.

Specific purposes of these lighting districts are as follows:

• To reduce glare and potential distractions to night time training exercises occurring within this area.

• To balance the needs of the military, the City of San Antonio, and property owners regarding responsible development including outdoor lighting within this area.

• To permit the use of outdoor lighting that does not exceed the minimum level as guided by Illuminating Engineering Society (IES) recommended practices for night-time safety, utility, security, productivity, enjoyment, and commerce.

• Minimize adverse offsite impacts of lighting such as light trespass, and obtrusive light.

Designation Criteria. To be designated as a military lighting overlay district, an area must be five (5) miles or less from ~~within~~ ~~of~~ the perimeter of Camp Bullis/Camp Stanley, Randolph Air Force Base, or Lackland Air Force Base; provided, however, that if a Joint Land Use Study determines that lighting regulations are required in a smaller area than those required in a designated district, the City may initiate a rezoning to remove properties from a military lighting overlay district. If a Joint Land Use Study determines that different regulations are required or recommended, the City may modify the district regulations accordingly.

(a) Zoning Process and Classification.

(1) This section establishes a military lighting overlay district, specifies the general purposes of the military lighting overlay district and the scope of the standards within that district.

(2) The military lighting overlay district is established as an overlay to the regular base zoning districts.

(3) The planning and development services department shall coordinate with other appropriate departments or agencies in order to evaluate land use, traffic and other development related issues in determining the necessity of establishing a military lighting overlay district. All parties in interest and citizens shall have an opportunity to be heard at a public hearing in accordance with Chapter 211 of the Local Government Code.

(4) The zoning designation for the military lighting overlay district shall consist of a base zone symbol and the military lighting overlay district symbol "MLOD" as a suffix. The following two types of military lighting overlay districts shall be established and numbered sequentially to distinguish among different districts, i.e., "MLOD-1," "MLOD-2," etc.

EF/lj
02/08/2018
 # 11

(b) Military Lighting Regions (MLRs) within Military Lighting Overlay Districts (MLODs).

Overall geographic areas shall be known as Military Lighting Regions within the Military Lighting Overlay District and shall be specified as described below.

(1) MLR1- 3 miles or less from the installation (most restricted lighting) = LZ-2 for BUG rating limitations referenced in Exhibit 1. Lighting Zone 2 allows only 50 lumens in the Uplight High (UH) and Uplight Low (UL) zones, 100 lumens total (less than a 25W incandescent lamp).

(2) MLR2- greater than 3 miles and up to and including 5 miles from the installation (less restricted lighting) = LZ-3 for BUG rating limitations referenced in Exhibit 1. Lighting Zone 3 allows only 500 lumens in the Uplight High (UH) and Uplight Low (UL) zones, 1000 lumens total (about the output of a 75W incandescent bulb).

(3) This will ensure the following:

A. Consistent color temperature of the lights
B. Color temperatures do not exceed 4100K (white light or warm light) depending on MLR
C. Fully shielded lights
D. No light emitted above 90 degrees
E. Appropriate amount of light where needed
F. Glare restrictions are in place

Table 339.04-1 Maximum Allowable BUG Ratings for Non-Residential
Note: BUG ratings are defined by IDA

Maximum allowable Backlight ratings		
	MLR-1/ LZ-2	**MLR-2/ LZ-3**
Greater than 2 mounting heights from property line	B4	B5
1 to less than 2 mounting heights from property line and ideally oriented**	B3	B4
0.5 to 1 mounting heights from property line and ideally oriented**	B2	B3
Less than 0.5 mounting height to property line and ideally oriented**	B0	B1

EF/lj
02/08/2018
 # 11

*** To be considered "ideally oriented" the luminaire must be mounted with the backlight portion of the light output oriented perpendicular and towards the property line of concern*		
Maximum allowable Uplight ratings		
Allowed Uplight Rating	U2	U3
Allowed % light emission above 90 degrees for street or area lighting	0%	0%
Maximum allowable Glare ratings		
Allowed Glare Rating	G2	G3
Any luminaire not ideally oriented* with 1 to less than 2 mounting heights to any property line of concern	G1	G1
Any luminaire not ideally oriented* with 0.5 to 1 mounting heights to any property line of concern	G0	G1
Any luminaire not ideally oriented* with 0.5 mounting heights to any property line of concern	G0	G0
**Any luminaire that cannot be mounted with its backlight perpendicular to any property line within 2x the mounting heights of the luminaire location shall meet the Allowed Glare Rating.*		

(c) Limits to Off Site Impacts. All luminaires shall be rated and installed using either Option A (the maximum Allowable BUG ratings as shown in Exhibit 1) or Option B (through computer lighting calculations/photometric calculations). Only one option may be used per permit application.

(1) Option A: All luminaires shall be rated and installed according to Exhibit 1.

(2) Option B: Will be required for all non-residential luminaires that:

(A). Do not have BUG ratings, or exceed acceptable BUG ratings.

(B). Are not fully shielded, or have adjustable mountings.

The entire outdoor lighting design shall be analyzed using industry standard lighting software including inter-reflections in the following manner:

1. Input data shall describe the lighting system including luminaire locations, mounting heights, aiming directions, and employing photometric data tested in accordance with IES guidelines. Buildings or other physical objects on the site within three object heights of the property line must be included in the calculations.

2. Analysis shall utilize an enclosure comprised of calculation planes with zero reflectance values around the perimeter of the site. The top of the enclosure

shall be no less than 33 feet above the tallest luminaire. Calculations shall include total lumens upon the inside surfaces of the box top and vertical sides and maximum vertical illuminance (footcandles and/or lux) on the sides of the enclosure.

3. Photometric plan and data sheets, such as or similar to that furnished by manufacturers, showing the angle of cut off or light emissions.

4. A lighting plan and photometric plan shall be prepared by a certified engineer, lighting engineer, architect, landscape architect or designer.

The design complies if:

i. The total lumens on the inside surfaces of the virtual enclosure are less than 15% of the total site lumen limit per Exhibit 2; and

ii. The maximum vertical illuminance on any vertical surface is less than the allowed maximum illuminance per Exhibit 3.

"Total initial luminaire lumens" is a measurement in addition to footcandles or lux. The footcandle (fc) is equal to one lumen per square foot. Lux is the metric unit and is equal to one lumen per square meter.

Table 339.04-2 Allowed Total Initial Site Lumens

	MLR-1/ LZ-2	**MLR-2/ LZ-3**
Allowed Lumens per SF	2.5	5.0
Allowed Base Lumens per Site	7,000	14,000

Note: Lighting Zones (LZ) are defined in IDA model ordinance

Table 339.04-3 Maximum Vertical Illuminance at any point in the plane of the property line

Maximum Allowable Vertical Illuminance	
MLR-1/ LZ-2	**MLR-2/ LZ-3**
0.3 FC or 3.0 LUX	0.8 FC or 8.0 LUX

Note: Lighting Zones (LZ) are defined in IDA model ordinance

Table 339.04-4 Additional Allowances for Certain Non-Residential Uses

	MLR-1/ LZ-2	**MLR-2/ LZ-3**
Additional Lumens Allowances for All Buildings except service stations and outdoor sales facilities. A MAXIMUM OF THREE (3) ALLOWANCES ARE PERMITTED		

EF/lj
02/08/2018
 # 11

Building Entrances or Exits. This allowance is per door. In order to use this allowance, luminaires must be within 20 feet of the door.	2,000 lumens per door	4,000 lumens per door
Building Facades. This allowance is lumens per unit area of building façade that are illuminated. To use this allowance, luminaires must be aimed at the façade and capable of illuminating it without obstruction.	8 lumens per square foot area	16 lumens per square foot area
Sales or Non-sales Canopies. This allowance is lumens per unit area for the total area within the drip line of the canopy. In order to qualify for this allowance, luminaires must be located under the canopy.	6 lumens per square foot area	12 lumens per square foot area
Guard Stations. This allowance is lumens per unit area of guardhouse plus 2000 sf per vehicle lane. In order to use this allowance, luminaires must be within 2 mounting heights of a vehicle lane or the guardhouse.	12 lumens per square foot area	24 lumens per square foot area
Outdoor Dining. This allowance is lumens per unit area for the total illuminated hardscape of outdoor dining. In order to use this allowance, luminaires must be within 2 mounting heights of the hardscape area of outdoor dining.	5 lumens per square foot area	10 lumens per square foot area
Drive Up Windows. This allowance is lumens per window. In order to use this allowance, luminaires must be within 20 feet of the center of the window.	4,000 lumens per drive-up window	8,000 lumens per drive-up window
Additional Lumens Allowances for Service Stations only. Service stations may not use any other additional allowances		

EF/lj
02/08/2018
 # 11

Vehicle Service Station Hardscape. This allowance is lumens per unit area for the total illuminated hardscape area less area of buildings, area under canopies, area off property, or areas obstructed by signs or structures. In order to use this allowance, luminaires must be illuminating the hardscape area and must not be within a building, below a canopy, beyond property lines, or obstructed by a sign or other structure.	8 lumens per square foot area	16 lumens per square foot area
Vehicle Service Station Canopies. This allowance is lumens per unit area for the total area within the drip line of the canopy. In order to use this allowance, luminaires must be located under the canopy.	16 lumens per square foot area	32 lumens per square foot area
Additional Lumens Allowances for Outdoor Sales facilities only. Outdoor Sales facilities may not use any other additional allowances		
Outdoor sales lots. This allowance is lumens per square foot of uncovered sales lots used exclusively for the display of vehicles or other merchandise for sale, and may not include driveways, parking or other non sales areas and shall not exceed 25% of the total hardscape area. To use this allowance, Luminaires must be within 2 mounting heights of the sales lot area.	8 lumens per square foot area	12 lumens per square foot area
Outdoor sales frontage. This allowance is for linear feet of sales frontage immediately adjacent to the principal viewing location(s) and unobstructed for its viewing length. A corner sales	1,000 lumens per linear foot	1,500 lumens per linear foot

lot may include two adjacent sides provided that a different principal viewing location exists for each side. In order to use this allowance, luminaires must be located between the principal viewing location and the frontage outdoor sales area.		

Note: Lighting Zones (LZ) are defined in IDA model ordinance

(d) Lighting Plans

A lighting plan shall be submitted and approved at the time of permitting that include relevant source, luminaire and pole information including:

(1.) For commercial permitted projects

- Luminaire manufacturer and catalog number
- Lamp manufacturer and catalog number if applicable
- Mounting height
- BUG rating for each luminaire type, including for any variations in lamping and shielding or photometric plan in lieu of BUG rating
- Color information (CCT and CRI)

(2.) For residential permitted projects

- Lighting information may be submitted in the form of manufacturer specs and/or cut sheets to include:
  - Light source information
  - Location
  - Shielding, if applicable
  - Controls

(e) Certification Statement

The lighting plan/ photometric plan shall also contain a certification by the preparer of the lighting plan/photometric plan that the exterior lighting represented on the lighting plan complies with the requirements of this Ordinance.

(f)(~~b~~). **District Standards.**

(1) As used in this article, the following terms shall be defined as follows:

BUG: A luminaire classification system that rates: backlight (B), uplight (U), and glare (G).

Business: A person, partnership, corporation, or organization engaged in commerce, manufacturing, or a service; profit and non-profit seeking enterprise or concern. The definition is intended to be broadly construed and shall include, but not be limited to, charitable organizations.

Candela: The unit of measure indicating the luminous intensity (candlepower) of a light source in a specific direction.

Color Rendering Index (CRI): A measure of the accuracy with which a light source of a particular CCT renders different colors in comparison to a reference light source with the same CCT. A high CRI provides better illumination with the same or lower lighting levels. It is important not to mix lamps with different CCTs and CRIs. Specify both the CCT and CRI when purchasing lamps.

Correlated Color Temperature (CCT): A measure in degrees Kelvin (°K) of light's warmness or coolness. Lamps with a CCT of less than 3,200 °K are pinkish and considered warm. Lamps with a CCT greater than 4,000 °K are bluish-white and considered cool.

Digital Sign: Catho-ray tube (CRT), flat panel liquid-crystal display (LCD), plasma, aerial imaging, projector or other electronic devices that are at the end-point of a digital signage system, presenting the content to include: Dynamic signs, electronic signs, digital media advertising, as well as signs within a Digital Signage Network, In-store TV Network, Captive Audience Network, Narrowcasting Network, Out-of-home Media Network, Digital Media Network, and Advertising Network.

Direct light: Light emitted directly from the lamp, off of the reflector diffuser, or through the refractor or diffuser lens of a luminaire.

Exempted nonconforming luminaires: Any existing luminaires which were lawfully in place according to all applicable city ordinances at the time, but which do not now comply with all applicable regulations as of the effective date of district designation.

Flood lamp: means a specific form of lamp designed to direct its output in a specific direction (a beam) with a reflector formed from the glass envelope of the lamp itself, and with a diffusing glass envelope.

Foot-candle (fc): A unit of light measurement equal to one (1) lumen per square foot.

Full cutoff: Describes a luminaire light distribution where one hundred (100) candela per one thousand (1,000) lamp lumens (ten (10) percent) may emit at all vertical angles beginning at eighty (80) degrees up from nadir to less than ninety (90) degrees, and 0 (zero) candela per one thousand (1,000) lamp lumens (zero percent) is allowed at ninety (90) degrees (horizontal plane) and all angles above. This applies to all horizontal angles around the luminaire. A full cutoff luminaire is also fully shielded. (See Figure 1 ~~Exhibit 2~~).

Fully shielded: A lighting fixture constructed in such a manner that all light emitted by the fixture, either directly from the lamp or a diffusing element, or indirectly by reflection or refraction from any part of the luminaire, is projected below the

horizontal plane as determined by photometric test or certified by the manufacturer. A fully shielded fixture is not necessarily full cutoff.

Gasoline filling station: Shall have the definition as provided in Appendix A of the Unified Development Code.

Glare: A luminance produced by bright sources in the field-of-view superimposed on the image in the eye reducing contrast and hence visibility.

International Dark-Sky Association (IDA): A non-profit organization whose goals are to build awareness of the value of dark skies, and of the need for quality outdoor lighting.

"IESNA" (or "IES"): An acronym for the Illuminating Engineering Society of North America. The IESNA makes recommendations for outdoor lighting but does not set outdoor lighting community standards which are set through local regulations.

Illuminance: The quantity of light arriving at a surface measured in foot-candles.

Intermittent lighting: Luminaires that do not remain on for more than five (5) minutes.

Lumen: A unit of luminous flux. For purposes of this section, the lumen-output values shall be the initial lumen output ratings of a lamp. The lumen rating associated with a given lamp is generally indicated on its packaging or may be obtained from the manufacturer.

Luminaire: A complete lighting fixture consisting of a lamp or lamps together with the parts designed to distribute the light, to position and protect the lamps and to connect the lamps to the power supply.

Luminous flux: A quantitative expression of the brilliance of a source of visible light which is electromagnetic energy within the wavelength range of approximately three hundred ninety (390) nanometers (nm) to seven hundred seventy (770) nm. This quantity is measured in terms of the power emitted per unit solid angle from an isotropic radiator, a theoretical point source that radiates equally in all directions in three-dimensional space.

Mounting Height- The height of the photometric center of a luminaire above grade level.

Nadir: The direction pointing vertically down from the lowest light emitting part of the luminaire (see Figure 1 ~~Exhibit 2~~ for an example).

Nit: A unit of illuminative brightness equal to one (1) candle per square meter, measured perpendicular to the rays of the source.

EF/lj
02/08/2018
 # 11

Outdoor lighting: Illumination of an outside area or object by any man-made device that is located outdoors and produces light.

Photometric Plan: A point-by-point plan illustrating the intensity and location of lighting on the property.

Sign, externally illuminated: means a sign illuminated by light sources from the outside.

Spot lamp: means a specific form of lamp designed to direct its output in a specific direction (a beam) with a reflector formed from the glass envelope of the lamp itself, and with a clear or nearly clear glass envelope. Spot lamps are those lamps so designated by the manufacturers.

Street lighting: is defined as lighting provided for major, collector, and local roads where pedestrians and cyclists are generally present. The primary purpose of street lighting is to help the motorist identify obstacles, provide adequate visibility of pedestrians and cyclists, and assist in visual search tasks, both on and adjacent to the roadway.

Temporary outdoor lighting: Lighting allowed as specified in an approved temporary permit pursuant to the requirements of subsection 20.J ~~15.I~~ below.

Trespass lighting: Light emitted by a luminaire that falls outside the boundaries of the property on which the luminaire is sited.

Figure 1 ~~**Exhibit 2**~~

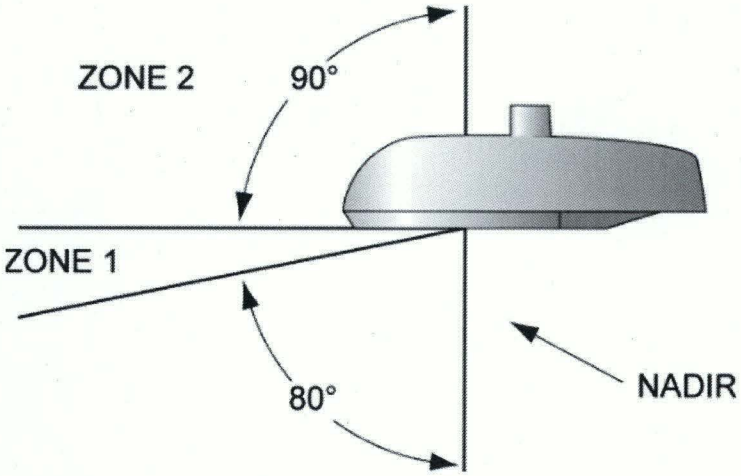

(2) All public and private outdoor lighting installed after the effective date(s) of an MLOD district designation shall conform to the requirements established by this section.

(3) Any luminaire in a new development that is aimed, directed, or focused so as to cause direct light from the luminaire to be directed toward an adjacent military base, camp or installation is prohibited. Such luminaire must be redirected or its light output controlled to eliminate such conditions.

(4) For new development properties situated at or above one thousand two hundred (1,200) feet in elevation (above sea level), and which are situated within one (1) mile from the perimeter of the affected military installation, all lighting shall be fully screened from the affected military installation(s). Methods of screening can include, but are not limited to, fencing and landscaping.

(5) Maximum CCT of 3000K for all outdoor light sources within MLR1

(6) Maximum CCT of 4100K for all outdoor light sources within MLR2

(7) (~~5~~) **Residential Lighting.**

A. No trespass lighting within residential areas may exceed one and one-half (1½) foot-candles at the property line, with the exception of intermittent lighting which can be up to two (2) foot-candles.

B. All lighting within residential areas must comply with commercial lighting subsections (9~~6~~)A—E below.

(8) Residential Lighting Exceptions

A. Low Ambient Landscape lighting.

(9)(~~6~~) **Commercial Lighting.**

A. All lighting fixtures installed on any commercial property and which include or exceed two (2) foot-candles shall be fitted to render them full cutoff (no light output emitted above ninety (90) degrees at any lateral angle around the fixture.) See "acceptable fixture" designation as shown in Figure 2 ~~Exhibit 3~~. The manufacturer or firm handling the installation of outdoor lighting must provide documentation to prove full cutoff status of outdoor lighting to the planning and development services department during the plan review stage.

EF/lj
02/08/2018
 # 11

Figure 2 ~~Exhibit 3~~

Examples of Acceptable / Unacceptable Lighting Fixtures

Illustrations by Bob Crelin© 2005. Rendered for the Town of Southampton, NY. Used with permission.

EF/lj
02/08/2018
 # 11

B. For lighting horizontal tasks such as roadways, sidewalks, entrances and parking areas, fixtures must meet "full cutoff" criteria (no light output emitted above ninety (90) degrees at any lateral angle around the fixture).

C. Intermittent lighting must be of the "motion sensor" type that stays on for a period of time not to exceed five (5) minutes and has a sensitivity setting that allows the luminaire to be activated only when motion is detected on the site.

D. All trespass lighting shall not exceed two and one-half (2½) foot-candles measured at the property line, except that residential trespass lighting is regulated in subsection f(7)A ~~b(5)A~~ above.

E. Floodlight fixtures must be aimed so as to prevent direct radiation of light into the open sky at any angle above the horizontal plane as shown in Figure 3 ~~Exhibit 4~~ and verified using a tool such as shown in Exhibit 8~~5~~.

Figure 3 ~~Exhibit 4~~

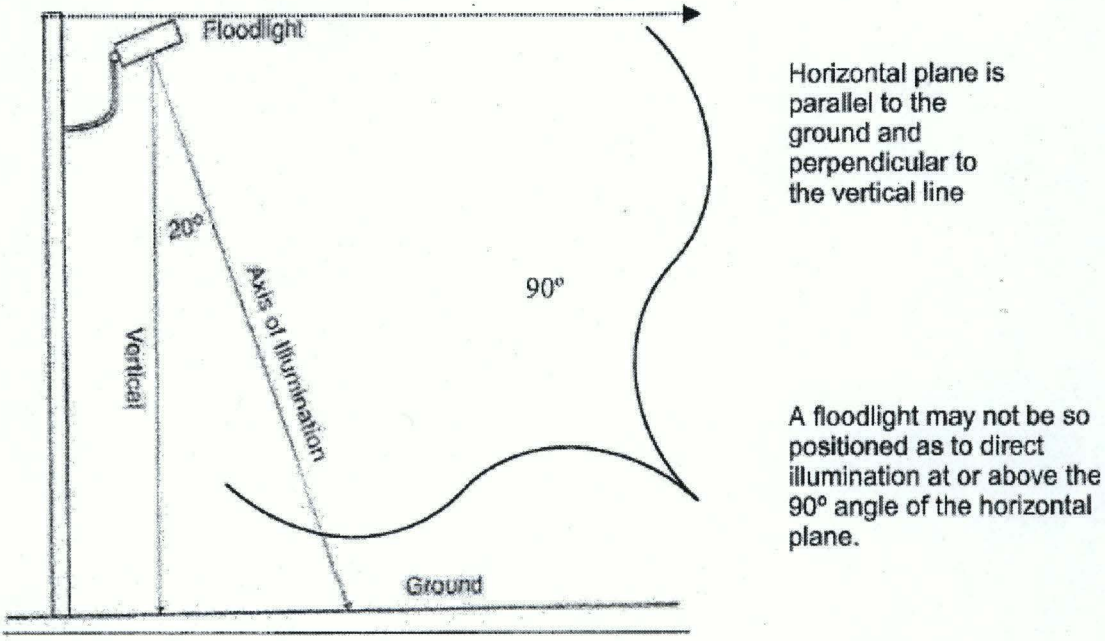

Figure 4 ~~Exhibit 5~~

EF/lj
02/08/2018
 # 11

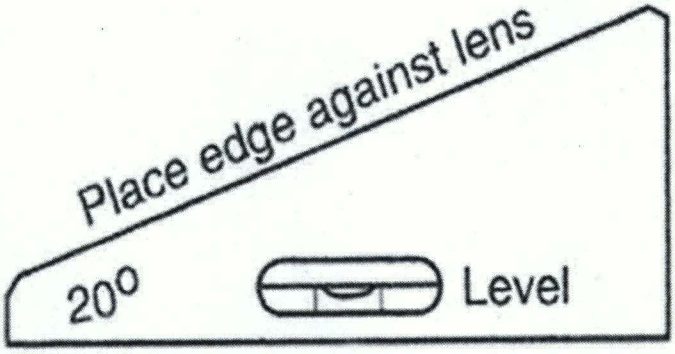

Figure ~~4 Exhibit 5~~: This is a tool for aiming lights such as the floodlight represented in Figure 3 ~~Exhibit 4~~. This tool would verify the angle of 20° by placing the upper edge of the tool against the floodlight lens and adjusting the floodlight so that a level parallel to the bottom edge shows level.

F. With the exception of lighting which is required for security and safety such as parking lot illumination, businesses must turn off outdoor lights emitting illumination levels exceeding two (2) foot-candles (fc) after 11:00 p.m or 1 hour after closing, the later of the two.

G. Lighting installed to illuminate construction sites in order to secure or protect equipment at night shall meet the requirements of subsection f. (9) A ~~b. (6) A~~ above.

(10) Non-Residential

A. Non-residential limits to off-site impacts are determined using Backlight, Uplight, and Glare (BUG) ratings.

(11)(~~7~~) Gasoline Filling Stations:

A. Outdoor sales and service station canopies must utilize canopy lights that are fully recessed into the canopy or are fully shielded by the canopy.

B. The following average maintained illuminance levels for service stations must not be exceeded:

Service Station Component	Lighting Level
Approach	2.0 fc
Driveway	2.0 fc
Pump Island	10.0 fc
Building Facade	3.0 fc
Service Areas	3.0 fc

Landscape Highlights	2.0 fc

Note: fc = foot-candle

(12)(~~8~~) **Parking Lot and Parking Structure Lighting:**

A. Total pole and fixture height shall comply with section 35-392.b of this Chapter.

B. All lighting luminaires in surface parking lots and on the top decks of parking structures shall be fitted to render them full cutoff.

C. Reflectivity. In order to allow for a variety of surface material options:

i. ~~a.~~ Surface parking lots shall be designed, coated or constructed so that illumination levels are no more than what is reflected from asphalt at an average of twenty (20) foot-candles.

ii. ~~b.~~ Top decks of parking structures shall be designed, coated or constructed so that illumination levels are no more than what is reflected from asphalt at an average of fifteen (15) foot-candles.

D. One (1) hour after closing, businesses must reduce light output ~~turn off~~ at least fifty (50) percent ~~of lighting luminaires~~ in surface parking lots and on top decks of parking structures; however, those luminaires turned off may be set to function utilizing a motion detector system or dimmer.

(13)(~~9~~) **Outdoor Sign Lighting.**

A. All signs, except conventional non-digital off-premise signs, located within three-quarters (¾) of a mile of ~~Camp Bullis/Camp Stanley~~ a military installation with an associated MLOD designation shall be positioned in such a manner and contain "dark sky" approved shielding devices as to significantly reduce spillover light affecting the military installation and operations. In no instance shall signs be positioned facing parallel to the adjacent boundaries of the military installation.

B. On-premises signs may remain illuminated during regular business hours, but may not be illuminated later than one-half (½) hour after the business is no longer open to the public, nor prior to the daily opening of the business to the public.

C. On-premises signs utilizing neon tube lighting shall be exempt from the requirements of subsection B above.

D. Single-tenant on-premises signs shall be illuminated at a level no greater than seven (7) foot-candles measured at five (5) feet from the light source. Multi-tenant on-premises signs shall be illuminated at a level no greater than twelve (12) foot-candles measured at five (5) feet from the light sources.

E. Exterior means of illumination utilized for on-premises signs shall be positioned in a "top down" manner as depicted in Exhibit7-4. Bottom-mounted fixtures shall not be used for on-premises signs.

F. Conventional non-digital off-premises signs shall employ an upward illumination system utilizing no more than three (3) ~~two (2)~~ luminaires to illuminate each sign message area (face). Each luminaire shall employ a refractor and hood that focuses the light on to the sign face and each luminaire may not exceed two ~~four~~ hundred (200) (~~400~~) watts.

G. All on-premises and off-premises digital signs shall be illuminated at a level no greater than 0.3 footcandles over ambient light levels for the location and time and shall employ light cutoff devices, such as louvers, to minimize light escaping above the horizontal plane. This subsection 13(~~9~~)G. is not exempt from the requirements of subsection (13)(~~9~~)B. above.

H. Other than the requirements contained in subsection (d)(~~b~~) (1) and subsection (13)(~~9~~), the installation, operation, alteration, repair or improvement of an illumination device used for an off-premises sign are not subject to the other provisions of sections 35-339.04 or 35-498, but are subject to provisions of Chapter 28 and Chapter 35 as appropriate.

I. Nothing in this section shall be interpreted to authorize signs in areas of the city prohibiting signs.

(14) Externally Illuminated sign standards.

A. External illumination for signs shall conform to the following lamp source, shielding restrictions and lumen caps as shown in Exhibit 9.

B. Upward-directed sign lighting is prohibited.

Table 339.04-5 Lamp Type and Shielding Standards

	Lighting Zone	
Color Rendition:	LZ-2	LZ-3
Initial output greater than or equal to 1800 lumens	F	F
Initial output below 1800 lumens	A(1)	A(1)

Note: Lighting Zones (LZ) are defined in IDA model ordinance

Notes to Table 339.04-5.

A = all types of light fixtures are allowed except that any spot or floodlight shall be aimed not higher then twenty-five degrees from the vertical line between the light fixture and the ground when light emitted from a light fixture is visible from any off-site residential property or public roadway.

EF/lj
02/08/2018
 # 11

F = only fully shielded light fixtures allowed.

1 = Flood or spot lamps shall be aimed no higher than twenty-five degrees from the vertical line between the light fixture and the ground when the source is visible from any off-site residential property or public roadway.

(**15**)(~~10~~) **Street Lighting.**

A. This subsection regulates the illumination levels and CCT for the MLR's street lights that are installed on any street and must follow the American National Standard Practice for Roadway Lighting under the IESNA.

B. Street light illumination must follow the guidelines in paragraph ~~D~~ C, D, and E. of this subsection unless a licensed professional engineer, trained and experienced in the science of illumination engineering, deems other illumination levels based on IESNA standards more appropriate for existing conditions and staff concurs with this assessment.

C. Street lights installed in residential areas on IESNA classified local roads shall have a max CCT of 3000K. Street lights installed on IESNA classified collector and major roads shall have a max CCT of 4000K.

D ~~C~~.All standard streetlights must utilize full cutoff type luminaires that are installed level to the ground in two intersecting perpendicular planes (see Figure 5 ~~Exhibit 6~~), and should be horizontally level in all directions.

Figure 5 ~~Exhibit 6~~

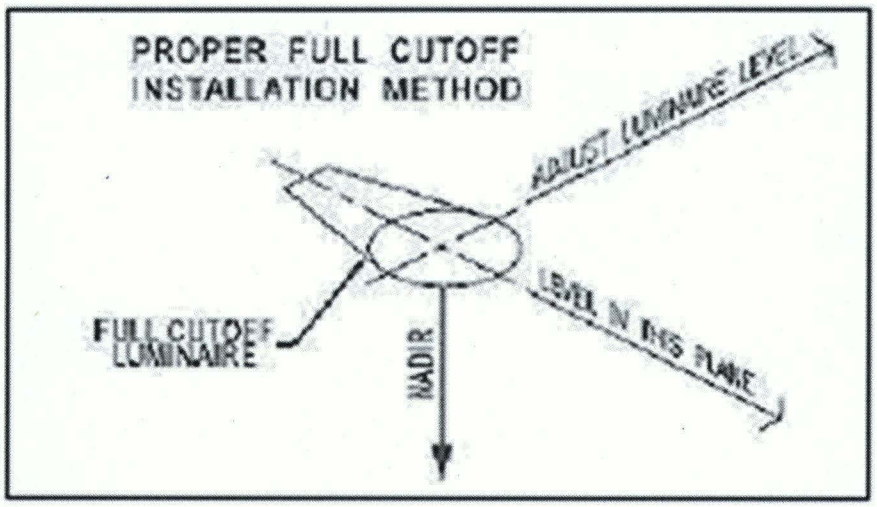

E ~~D~~.New ornamental street lights must be classified as either IES "Full Cutoff' or IES "Cutoff" as determined by a valid photometric report. This report must be generated for the specified model by a qualified testing lab (testing to IES standards) and must include a full vertical evaluation through one hundred eighty (180) degrees, otherwise that fixture will be unacceptable.

(**16**)(~~11~~) **LEED Standards.** It is encouraged that, where possible, LEED (The Leadership in Energy and Environmental Design) certified lighting standards be substituted for the requirements of subsections (5) through (10) above, so long as the minimum standards of this section are met. If a project utilizes LEED certified lighting standards, the remainder of a project's design does not have to meet LEED standards.

(**17**)(~~12~~) **Tower and Structure Lighting.** See FCC or FAA regulations.

(**18**)(~~13~~) **Other Prohibited Lighting.** Unless authorized by the city council by specific ordinance for a special event:

A. The use of laser source light or any similar high intensity light, such as used for outdoor advertising or entertainment, when projected above the horizontal plane is prohibited; and

B. The operation of searchlights for any purposes is prohibited.

(**19**)(~~14~~) **Unmanned Automated Teller Machine Lighting.** Unmanned automated teller machines (ATMs) shall comply with the requirements as listed in section 59.307, Texas Finance Code and this article by utilizing fully shielded or full cutoff luminaires as appropriate.

(**20**)(~~15~~) **Exemptions.** The following outdoor lighting instances are exempt from the lighting requirements of this section:

A. All legal outdoor lighting in place prior to the effective date of an MLOD district designation. (see section (21~~16~~) below).

B. Outdoor lighting for which light is produced directly by the combustion of fossil fuels.

C. Outdoor lighting used during law enforcement, fire, and medical activities and for meteorological data gathering purposes.

D. Outdoor lighting employed during emergency or night-time repairs of roads and utilities.

E. Lighting required by law to be installed on motor vehicles.

F. Lighting required for the safe operation of aircraft.

G. Outdoor lighting installed on Federal and State facilities; however, voluntary compliance is encouraged.

H. Decorative holiday lighting from November 15 through the next January 15.

I. Applicable Building Code required lighting for steps, stairs, walkways, and building entrances.

J~~I~~. Temporary exemptions: Any individual may submit a written request to the director for temporary lighting and obtain a temporary electrical permit. For a temporary use, the temporary electrical permit may grant temporary lighting for a period not to exceed thirty (30) days, with at least thirty (30) days passing

before another temporary electrical permit may be issued. The request for temporary lighting must contain the following information in addition to information required to obtain a temporary electrical permit:

a. Proposed use and location of the outdoor light requested.

b. Type of lamp(s) to be used, including manufacturer's part number and initial lumens.

c. Type of light fixture used, including manufacturer's model number and specification (cut) sheets indicating photometric distribution data stated in iso foot-candle diagrams.

d. Starting and ending dates for temporary lighting use.

e. Contact information including name of requester, affiliation (if applicable), address and telephone number.

f. And such other information the director may require.

(**21**)(~~16~~) **Maintenance and Repair of Legal Nonconforming Luminaires.**

A. All luminaires lawfully in place prior to the effective date(s) of an MLOD district designation shall have legal nonconforming status.

B. Minor repair and maintenance of legal nonconforming luminaires up to fifty (50) percent of the replacement value is allowed, however any alteration in excess of fifty (50) percent shall terminate the nonconforming status and at that time all standards of this section must be met.

(**22**)(~~17~~) **Administration.** The director shall administer this section.

(**23**)(~~18~~) **Variances and Special Exceptions.**

A. The board of adjustment may grant a variance to the requirements of this section where a literal enforcement of the provisions will result in unnecessary hardship. A variance request must be submitted to the city in writing that sets out the basis for the request. No variance can be granted unless it meets the approval criteria outlined in subsection 35-482(e).

B. A special exception to the requirements of this section may be granted by the board of adjustment where a plan's lighting design does not meet strict design standards but alternative methods may be used which meet the intent of the Code.

SECTION 3. All other provisions of Chapter 35 of the City Code of San Antonio, Texas, shall remain in full force and effect including the penalties for violations as made and provided for in Section 35-491.

SECTION 4. The Development Services Department is directed to initiate a rezoning to modify or add the Camp Bullis Military Lighting Overlay District (MLOD-1) to add the Military Lighting Regions (MLR) as amended and established herein to all territory within the corporate limits of the City of San Antonio and five (5) miles or less from the perimeter of the limits of

EF/lj
02/08/2018
 # 11
Camp Bullis.

SECTION 5. The Development Services Department is directed to initiate a rezoning to establish the Lackland Military Lighting Overlay District (MLOD-2) to include the Military Lighting Regions (MLR) as amended and established herein to all territory within the corporate limits of the City of San Antonio and five (5) miles or less from the perimeter of the limits of Lackland Air Force Base, including Lackland Medina Annex.

SECTION 6. All regulations existing prior to the effective date of this ordinance shall continue within and upon the existing lands which carry the MLOD designation until such time as the directives in Section 4 and Section 5 herein are completed and finally adopted by the City Council.

SECTION 7. Should any Article, Section, Part, Paragraph, Sentence, Phrase, Clause, or Word of this ordinance, for any reason be held illegal, inoperative, or invalid, or if any exception to or limitation upon any general provision herein contained be held to be unconstitutional or invalid or ineffective, the remainder shall, nevertheless, stand effective and valid as if it had been enacted and ordained without the portion held to be unconstitutional or invalid or ineffective.

SECTION 8. The City Clerk is directed to publish notice of this ordinance amending City Code, Chapter 35, Unified Development Code. Publication shall be in a newspaper in the City in accordance with Section 17 of the City Charter.

SECTION 9. The publishers of the City Code of San Antonio, Texas are authorized to amend said Code to reflect the changes adopted herein and to correct typographical errors and to index, format and number paragraphs to conform to the existing code.

SECTION 10. This ordinance shall become effective February 18, 2018.

PASSED AND APPROVED this 8th day of February 2018.

M A Y O R
Ron Nirenberg

ATTEST:

for Leticia M. Vacek, City Clerk

APPROVED AS TO FORM:

for Andrew Segovia, City Attorney

Agenda Item:	**11 (in consent vote: 5, 6, 7, 8, 9, 10, 11, 12, 13, 14, 15, 18, 19A, 19B, 20A, 20B, 20C, 20E, 20H, 20I, 20L, 20M, 20P)**
Date:	02/08/2018
Time:	09:51:22 AM
Vote Type:	Motion to Approve
Description:	Ordinance amending Chapter 35, Unified Development Code of San Antonio, Texas, Military Lighting Overlay Districts (MLOD), and directing the Development Services Department to start a rezoning of certain properties 5 miles or less from either Camp Bullis or Lackland Air Force Base. [Roderick J. Sanchez, Assistant City Manager; Michael Shannon, Director, Development Services]
Result:	Passed

Voter	Group	Not Present	Yea	Nay	Abstain	Motion	Second
Ron Nirenberg	Mayor		x				
Roberto C. Treviño	District 1		x				x
William Cruz Shaw	District 2		x				
Rebecca Viagran	District 3		x				
Rey Saldaña	District 4		x				
Shirley Gonzales	District 5		x				
Greg Brockhouse	District 6		x				
Ana E. Sandoval	District 7		x				
Manny Pelaez	District 8		x				
John Courage	District 9		x			x	
Clayton H. Perry	District 10		x				